REVISIONS			
REV.	DESCRIPTION	DATE	APPROVED
A	REDRAWN IN SW	8/16/2004	
B	CHANGE TO XC	1/15/2014	BEM

PIN #	COLOR
1	BLACK
2	WHITE
3	RED
4	GREEN/YELLOW

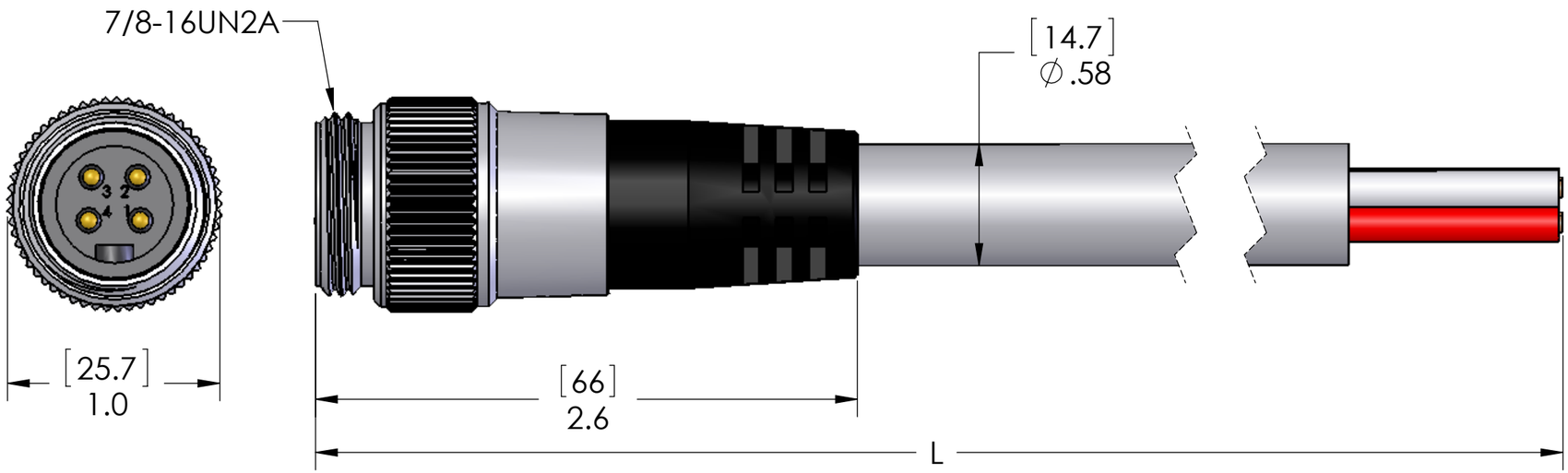

P/N	L	STD?
MINH-4MP-3	36" [0.9M]	YES
MINH-4MP-6	72" [1.9M]	YES
MINH-4MP-12	144" [3.6M]	YES
MINH-4MP-20	240" [6M]	YES
MINH-4MP-30	360" [9.2M]	YES
MINH-4MP-40	480" [12.2M]	NO
MINH-4MP-50	600" [15.2M]	NO

PARTS LISTED AS NOT BEING STANDARD
MAY REQUIRE MINIMUM ORDERS

MATERIALS	
BODY:	BLACK PVC
CONTACTS:	GOLD PLATED COPPER ALLOY
CABLE:	14/4 STOOW, GRAY JACKET
COUPLING:	NICKEL PLATED BRASS

APPROVALS:	
US	UL LISTED
CANADA	C-UL LISTED

PROPRIETARY AND CONFIDENTIAL
THE INFORMATION CONTAINED IN THIS DRAWING IS THE SOLE PROPERTY OF MENCOM CORPORATION. ANY REPRODUCTION IN PART OR AS A WHOLE WITHOUT THE WRITTEN PERMISSION OF MENCOM CORPORATION IS PROHIBITED.

VOLTS	600V
AMPS	15A
TEMP	105°C
SPECIFICATIONS	

UNLESS OTHERWISE SPECIFIED:
DIMENSIONS ARE IN INCHES AND [MM]

MATERIAL

FINISH

DO NOT SCALE DRAWING

	NAME
DRAWN	BEM
CHECKED	
ENG APPR.	
MFG APPR.	
Q.A.	

COMMENTS:

MENCOM CORPORATION

TITLE:
4 PL MALE PLUG 14AWG

SIZE	DWG. NO.	REV
B	MINH-4MP-ZZ	B

SCALE: 3:2 WEIGHT: SHEET 1 OF 1