PIN #	COLOR
1	BLACK
2	GREEN/YELLOW
3	RED
4	WHITE

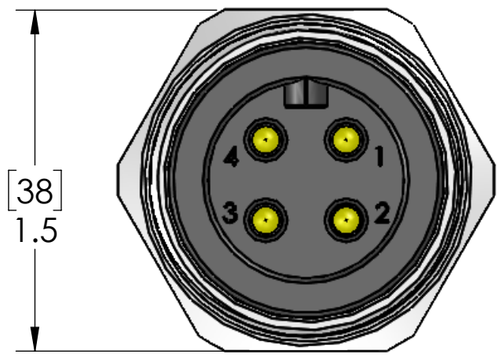

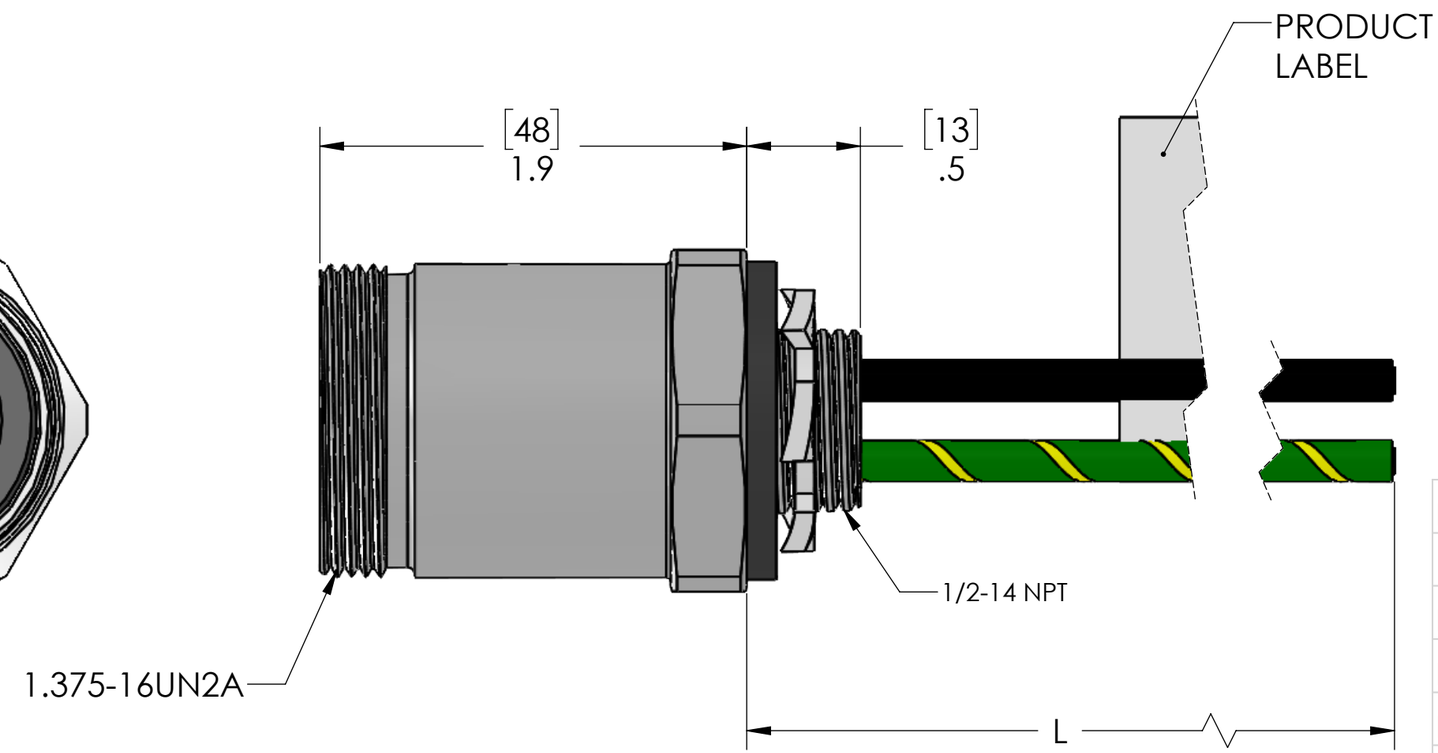

P/N	L
PMIN-40MR-0.3M	12" [0.3m]
PMIN-40MR-0.5M	20" [0.5m]
PMIN-40MR-1M	40" [1m]
PMIN-40MR-2M	79" [2m]
PMIN-40MR-3M	117" [3m]
PMIN-40MR-4M	157" [4m]
PMIN-40MR-5M	197" [5m]
PMIN-40MR-6M	236" [6m]
PMIN-40MR-8M	315" [8m]
PMIN-40MR-10M	393" [10m]

OTHER LENGTHS AVAILABLE
CONSULT FACTORY

MATERIALS	
BODY:	NICKEL PLATED BRASS
CONTACTS:	GOLD PLATED COPPER ALLOY
INSERT:	BLACK PVC
WIRE:	10AWG UL1015
JAM NUT:	ZINC PLATED STEEL
GASKET:	TPE

MAX PANEL THICKNESS [5mm] 0.20

CAUTION:

RISK OF ELECTRICAL SHOCK
DO NOT DISCONNECT UNDER LOAD

RATINGS:	
SCCR RATING:	65kA Breakers and Fuses
RoHS COMPLIANT:	Yes
PROTECTION:	IP67
UL CATEGORY:	PVVA (US), PVVA7 (Canada)
U.S.	UL 2237 LISTED, File E469485
CANADA	C-UL 2237 LISTED, File E469485

PROPRIETARY AND CONFIDENTIAL
THE INFORMATION CONTAINED IN THIS DRAWING IS THE SOLE PROPERTY OF MENCOM CORPORATION. ANY REPRODUCTION IN PART OR AS A WHOLE WITHOUT THE WRITTEN PERMISSION OF MENCOM CORPORATION IS PROHIBITED.

VOLTS	600V
AMPS	32A
TEMP:	-40C TO 90°C

UNLESS OTHERWISE SPECIFIED:
DIMENSIONS ARE IN INCHES AND [MM]

MATERIAL
FINISH
DO NOT SCALE DRAWING

DRAWN BY	JJH
DRAWN DATE	06/22/2020
CHECKED BY	GO
CHECK DATE	06/23/2020

COMMENTS:

MENCOM CORPORATION

TITLE:
4 PL MAL PMIN RCP 1/2 NPT

SIZE	DWG. NO.	REV
B	PMIN-40MR-ZZ	C

SCALE: 3:2 | WEIGHT: | SHEET 1 OF 1