PMIN	WIRING	MINH
1	----	1
2	----	4
3	----	3
4	----	2

REVISIONS			
REV.	DESCRIPTION	DATE	APPROVED
A	DRAWN IN SW	7/8/2014	BEM

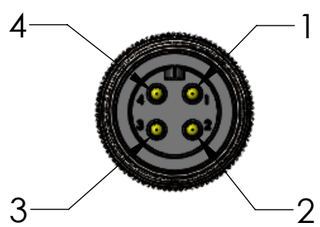

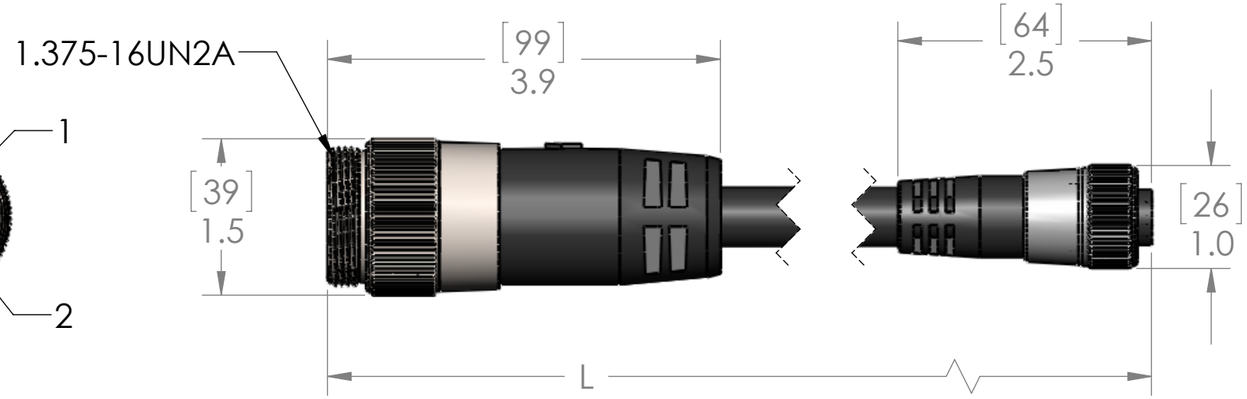

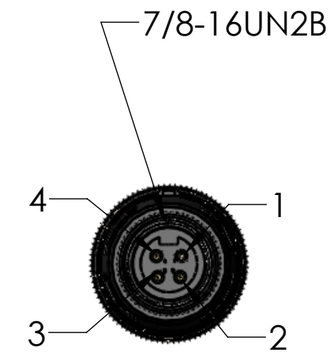

P/N	L
PMINH-44MFP-1M	40" [1m]
PMINH-44MFP-2M	79" [2m]
PMINH-44MFP-3M	117" [3m]
PMINH-44MFP-4M	157" [4m]
PMINH-44MFP-5M	197" [5m]
PMINH-44MFP-6M	236" [6m]
PMINH-44MFP-8M	315" [8m]
PMINH-44MFP-10M	393" [10m]
PMINH-44MFP-15M	590" [15M]

OTHER LENGTHS AVAILABLE
CONSULT FACTORY

MATERIALS	
BODY:	BLACK PVC
INSERT:	BLACK PVC
CONTACTS:	GOLD PLATED COPPER ALLOY
CABLE:	14/4 STOOW GRAY
COUPLING:	NICKEL PLATED BRASS

PROPRIETARY AND CONFIDENTIAL

THE INFORMATION CONTAINED IN THIS DRAWING IS THE SOLE PROPERTY OF MENCOM CORPORATION. ANY REPRODUCTION IN PART OR AS A WHOLE WITHOUT THE WRITTEN PERMISSION OF MENCOM CORPORATION IS PROHIBITED.

VOLTS	600V
AMPS	15A
TEMP	105C
APPLICATION	

UNLESS OTHERWISE SPECIFIED:
DIMENSIONS ARE IN INCHES AND [MM]
INTERPRET GEOMETRIC TOLERANCING PER:
MATERIAL
FINISH
DO NOT SCALE DRAWING

	NAME
DRAWN	JJH
CHECKED	
ENG APPR.	
MFG APPR.	
Q.A.	

COMMENTS:

MENCOM CORPORATION

TITLE:

4 PL MAL PMIN TO FEM MIN

SIZE	DWG. NO.	REV
B	PMINH-44MFP-ZZ	A

SCALE: 1:1.5 | WEIGHT: | SHEET 1 OF 1