M-13429 | 1

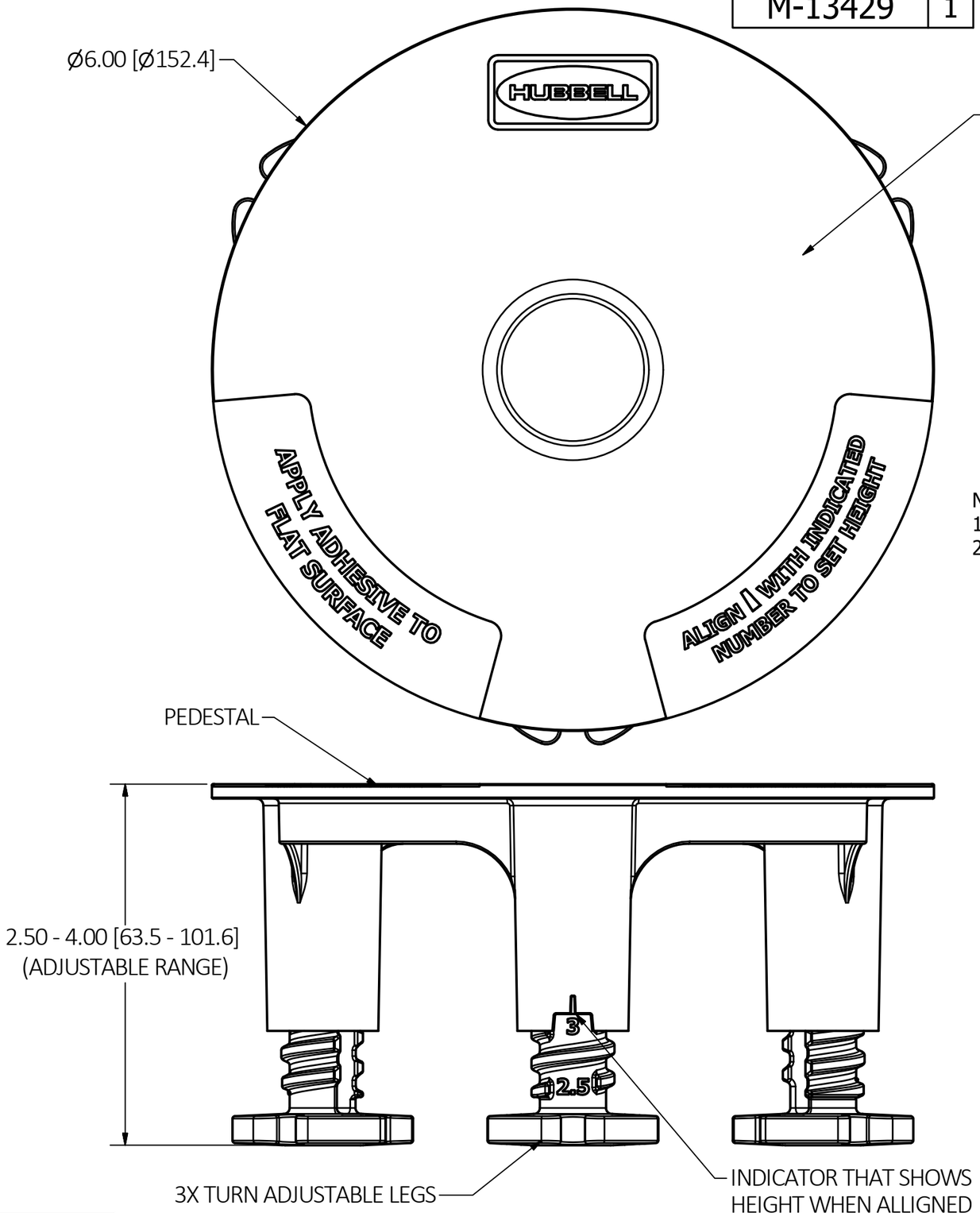

NOTES:
1) ALL DIMENSIONS ARE IN INCHES AND [MILLIMITERS]
2) FOR USE WITH HUBBELL RF400, PFB1, S1PFB AND CFBS1R4PFB FLOOR BOXES.

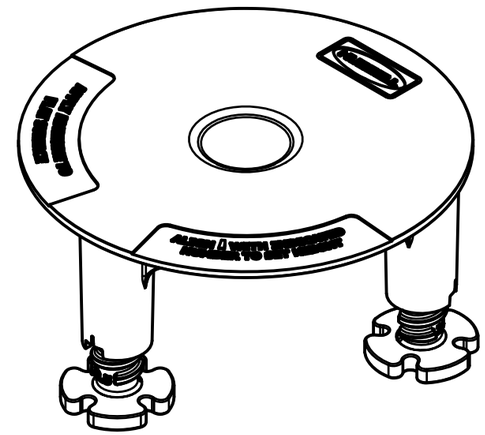

CATALOG NUMBER: PFBSTAND

LIST OF PARTS

DESCRIPTION	MATERIAL	FINISH
PEDESTAL	THERMOPLASTIC	N/A
LEGS	THERMOPLASTIC	N/A

REV	DESCRIPTION	APP	DATE
1	RELEASED PER DCN#22359	EMD	8/29/16

THE DESIGN AND DIMENSIONS OF THE PRODUCT SHOWN ON THIS DRAWING ARE SUBJECT TO CHANGE WITHOUT NOTICE. DIMENSIONS ARE IN INCHES [mm].

TITLE

FLOOR BOX STAND

WIRING DEVICE-KELLEMS
HUBBELL INCORPORATED
SHELTON, CT

TOLERANCES UNLESS OTHERWISE SPECIFIED
.XX = ± .01
.XXX= ± .005
ANGLE TOL. ±2°

DR. BY EMD | SCALE 1 : 1
CHK. BY | DATE 8/29/16

DIMENSION SHEET FOR CAT. NO.

B

M-13429

1

CAGE CODE 74545