SPECIFICATIONS	
CAP MATERIAL/FINISH	ALUMINUM ALLOY/OLIVE DRAB PLATING
CABLE AND EYELET MATERIAL	SST

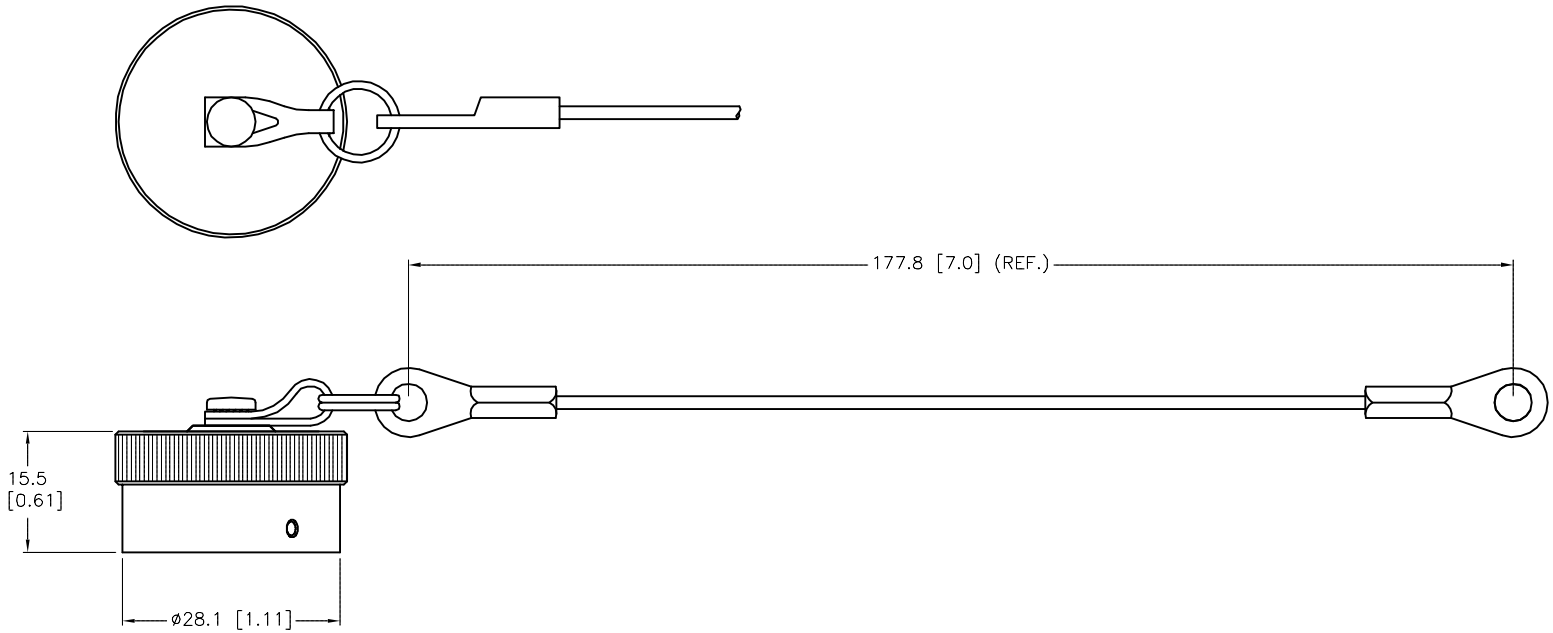

SOURCE DRAWING - FOR REFERENCE ONLY

NOTES:

1. ALL DIMENSIONS ARE REFERENCE.

REV	DESCRIPTION	BY	DATE	ECO NO.
A	DRAWING RELEASE	RDS	01/16/14	

RELATED DOCUMENTS
1.
2.
3.
4.

3RD ANGLE PROJECTION

THIS DRAWING IS CONFIDENTIAL AND THE PROPERTY OF TURCK INC. USE OF THIS DOCUMENT WITHOUT WRITTEN PERMISSION IS PROHIBITED.

TURCK INC
High Technology Sensors and Automation Controls

3000 CAMPUS DRIVE
MINNEAPOLIS, MN 55441
1-800-544-7769
(763) 553-7300
(763) 553-0708 fax
turck.com

MATERIAL: SEE SPECIFICATIONS

FINISH: SEE SPECIFICATIONS

ALL DIMENSIONS DISPLAYED ON THIS DRAWING ARE FOR REFERENCE ONLY

CONTACT TURCK FOR MORE INFORMATION

DRFT: RDS | DATE: 01/16/14
APVD: J.B. | SCALE: 1=1.0

UNIT OF MEASUREMENT
MILLIMETER [INCH]
DO NOT SCALE THIS DRAWING

DESCRIPTION: GT00-14S-CC

IDENTIFICATION NO.: U-59652 | REV: A

FILE: U-59652 | SHEET 1 OF 1

Approved 01/16/2014, work order #51261 by J.B.