MURR ELEKTRONIK
stay connected

MET 1-PHASE CONTROL AND ISOLATION TRANSFORMER

P: 500VA IN: 400VAC+/- 5% OUT: 230VAC

Single-phase - Control and Isolation Transformers
500 VA
Spring clamp terminals
Isolation class T 60/B

Link to Product

Illustration

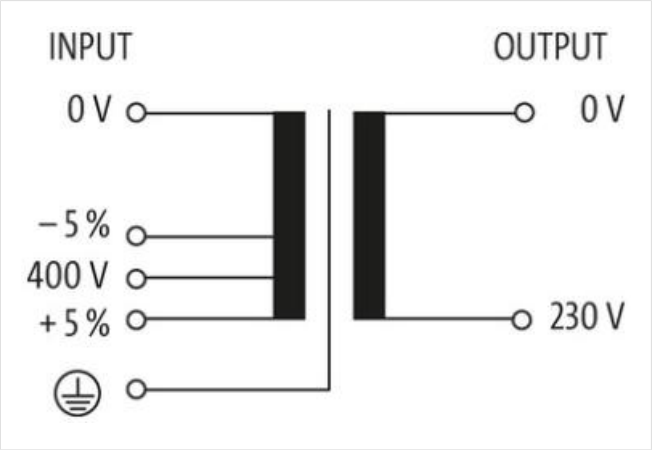

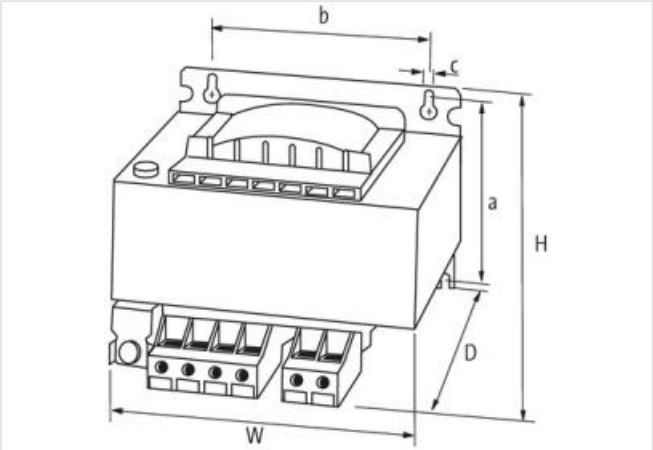

Product may differ from Image

General data

Standards	EN 61558-1, EN 61558-2-4, EN 62041 category 0
Mounting method	Key-hole mounting
Temperature range	-20...+60 °C (storage temperature -40...+80 °C)
Test isolation voltage	4 kV (prim./sec.)
Drill hole Ø	7×11 mm
Fixing centers a×b×c	90×122×7 mm

The information in this brochure has been compiled with the utmost care.
Liability for the correctness completeness and topicality of the information is restricted to gross negligence. Version: 2022-11-13

Dimensions H×W×D	112.6×150×146 mm
Output	
Output voltage	230 V AC
Output rating	500 VA
Input	
Input voltage	400 V AC ±5%
Inrush current	20.22 A (400 V AC)
Short-circuit current	43.35 A (400 V AC)
Input current	1.37 A (400 V AC)
Frequency	50...60 Hz
Product article number of manufacturer	6686021

The information in this brochure has been compiled with the utmost care.
Liability for the correctness completeness and topicality of the information is restricted to gross negligence. Version: 2022-11-13