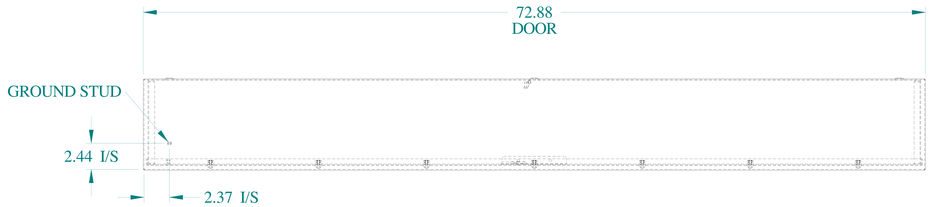

TOP VIEW

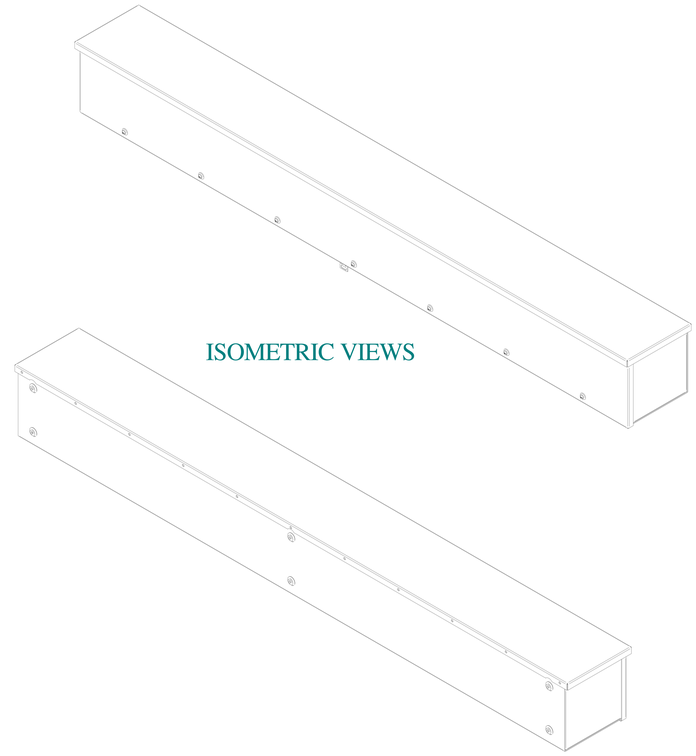

ISOMETRIC VIEWS

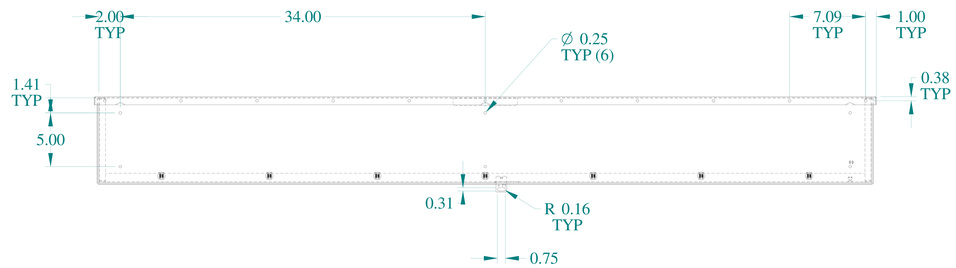

BACK VIEW

SIDE VIEW

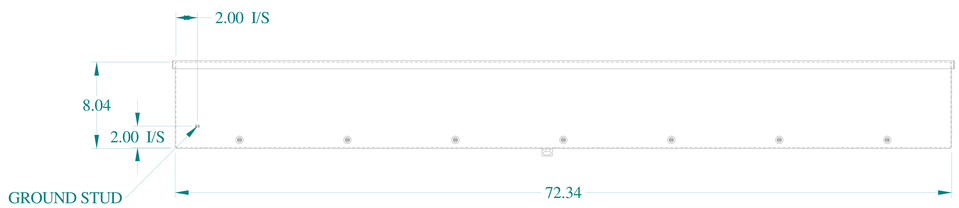

FRONT VIEW

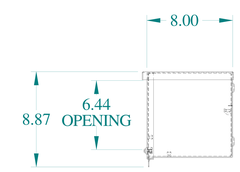

SIDE VIEW

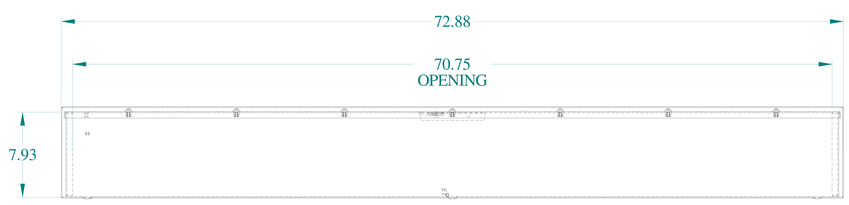

BOTTOM VIEW

HAMMOND MANUFACTURING®

www.hammondmfg.com

Data subject to change without notice.

Part # : C3RWT872	Date : Mar. 22, 2019

Link:www.hammfg.com/C3RWT872