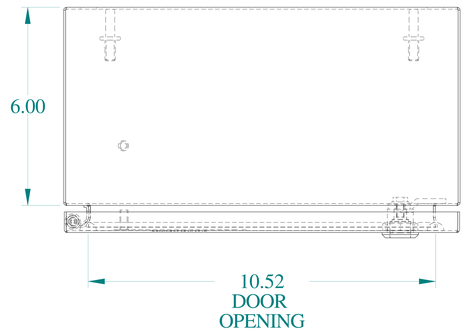

TOP VIEW

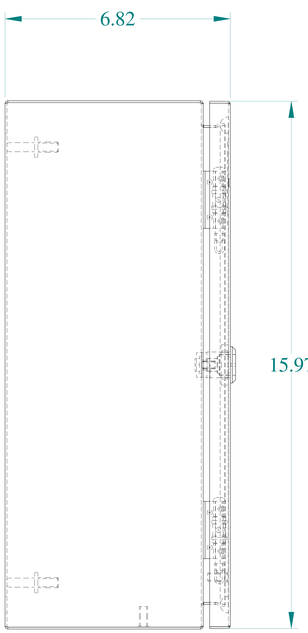

SIDE VIEW

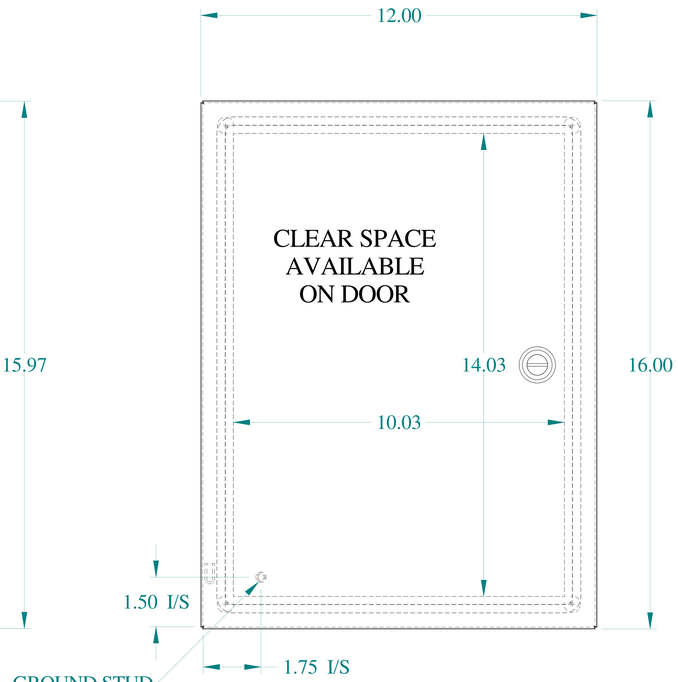

FRONT VIEW

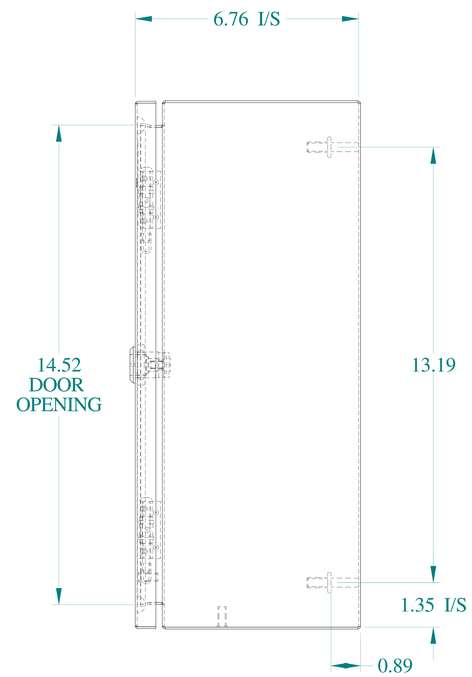

SIDE VIEW

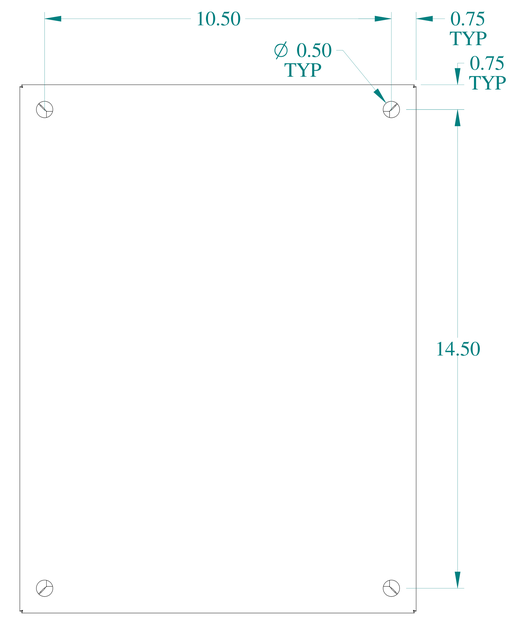

BACK VIEW

BOTTOM VIEW

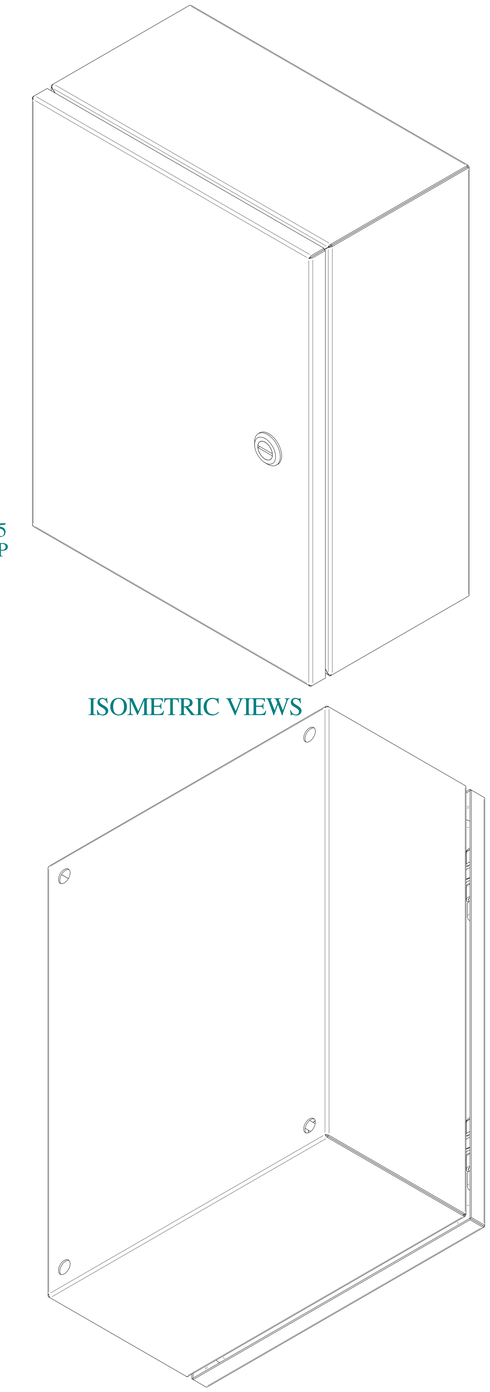

ISOMETRIC VIEWS

HAMMOND MANUFACTURING®

www.hammondmfg.com

Data subject to change without notice.

Part # : EN4SD16126S16	Date : Mar. 22, 2019

Link:www.hammfg.com/EN4SD16126S16