DRAWING NO. SE210997

REV	DATE	DESCRIPTION	ECO	BY	C'H'K.
R	2020-03-18 03:00:00 EST	UPDATED PART DIMENTIONS ---	53201	JL	TR

CATALOG NUMBER (5)	FIG. NO.	CONDUCTOR RANGE ALUMINUM OR COPPER	BOLT HOLE SIZE.	DIMENSIONS C MAX.	D	E	H MAX.	K DIA	L	N	T	B	RECOMMENDED TIGHTENING TORQUE: IN.LBS N.M (6)
K2A25U	1	TWO: 14 STR. - 1/0 STR.	1/4" [M6]	1.15 [29]	.81 [21]	----	.79 [20]	.27 [7]	1.47 [37]	.44 [11]	.19 [5]	----	50 (6)
K2A26U	1	TWO: 14 STR. - 2/0 STR.	1/4" [M6]	1.27 [32]	.81 [21]	----	.80 [20]	.27 [7]	1.47 [37]	.44 [11]	.19 [5]	----	120 (14)
K2A29U	2	TWO: 6 STR. - 250 kcmil	3/8" [M10]	1.66 [42]	1.50 [38]	----	1.20 [30]	.40 [10]	2.56 [65]	.50 [13]	.25 [6]	1.51	275 (31)
K2A31U	2	TWO: 6 STR. - 350 kcmil	1/2" [M12]	1.94 [49]	1.69 [43]	----	1.26 [32]	.56 [14]	2.88 [73]	.88 [22]	.25 [6]	----	275 (31)
K2A31U2N	3	TWO: 6 STR. - 350 kcmil	1/2" [M12]	2.31 [59]	3.00 [76]	1.75 [44]	1.39 [35]	.56 [14]	4.50 [114]	.63 [16]	.31 [8]	----	275 (31)
K2A36U	2	TWO: 2 STR. - 600 kcmil	1/2" [M12]	2.42 [61]	1.75 [44]	----	1.58 [40]	.53 [13]	3.20 [81]	.63 [16]	.44 [11]	2.02	375 (42)
K2A36U2N	3	TWO: 2 STR. - 600 kcmil	1/2" [M12]	2.42 [61]	3.22 [82]	1.75 [44]	1.39 [35]	.56 [14]	4.69 [119]	.63 [16]	.44 [11]	----	375 (42)
K2A40U	1	TWO: 300 - 800 kcmil	5/8" [M16]	3.20 [81]	1.66 [42]	----	1.95 [50]	.66 [17]	3.38 [86]	.85 [22]	.50 [13]	----	550 (62)
K2A40U2N	3	TWO: 300 - 800 kcmil	1/2" [M12]	3.20 [81]	3.03 [77]	1.75 [44]	1.95 [50]	.56 [14]	4.75 [121]	.63 [16]	.50 [13]	----	550 (62)
K2A44U	1	TWO: 500 - 1000 kcmil	5/8" [M16]	3.52 [89]	1.66 [42]	----	1.95 [50]	.66 [17]	3.50 [89]	.88 [22]	.50 [13]	----	550 (62)
K2A44U2N	3	TWO: 500 - 1000 kcmil	1/2" [M12]	3.21 [82]	3.03 [77]	1.75 [44]	1.95 [50]	.56 [14]	4.75 [121]	.63 [16]	.50 [13]	----	550 (62)

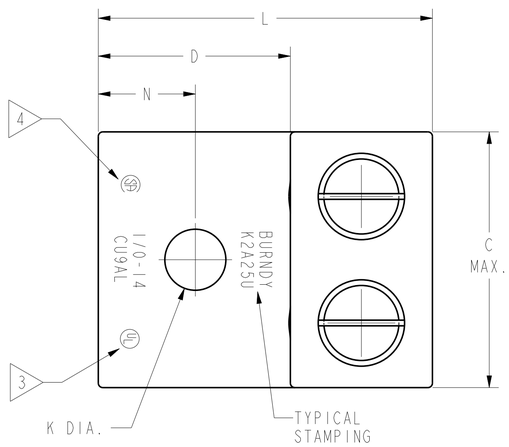

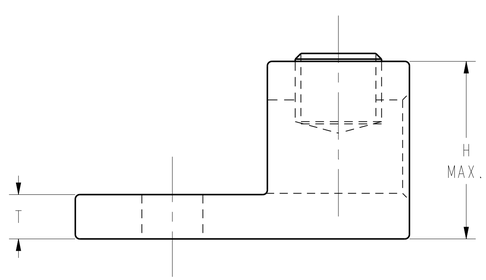

FIG. 1

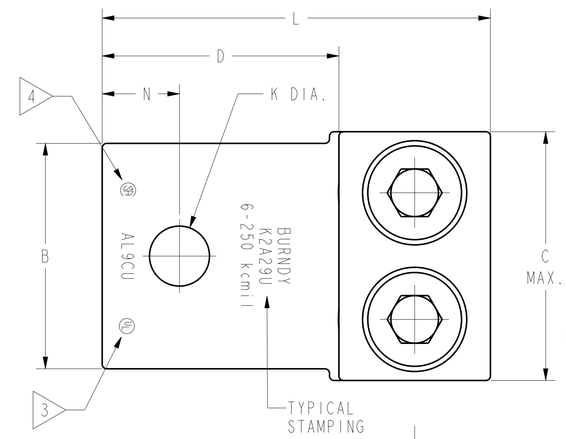

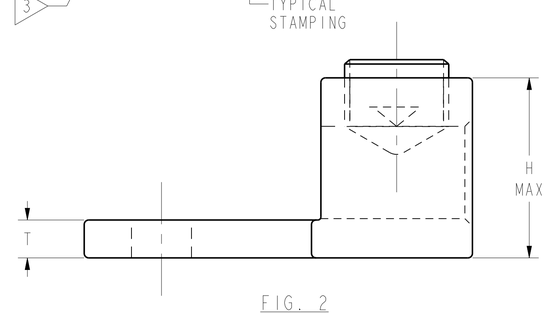

FIG. 2

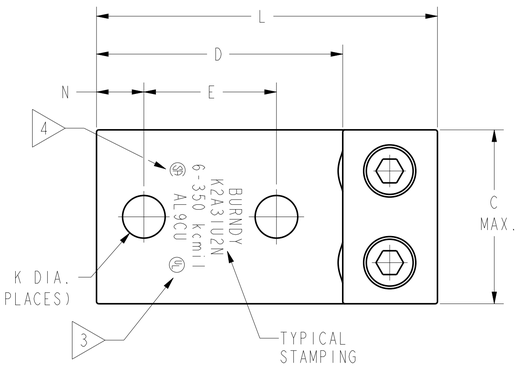

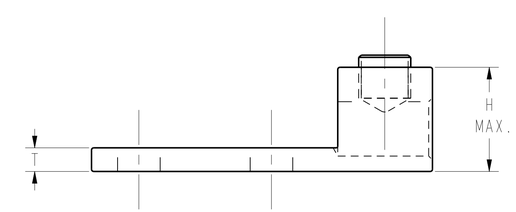

FIG. 3

NOTES:

1. MATERIAL-BODY: ALUMINUM
   SCREW: ALUMINUM

2. FINISH-BODY: TIN PLATED
   SCREW: TIN PLATED

3. CONNECTORS ARE UL LISTED TO UL486A- 486B FOR ALUMINUM AND COPPER CONDUCTORS AT 90°C. STAMP MAY READ CU9AL OR AL9CU TO INDICATE THIS LISTING.

4. CONNECTORS ARE CSA CERTIFIED TO C22.2, NO. 65 FOR INDICATED CONDUCTOR RANGE.

5. "N" INDICATES NEMA STANDARD STUD HOLES.

6. LISTED TORQUE VALUES ARE FOR MAXIMUM CONDUCTOR SIZES ACCOMMODATED.CONSULT UL486 TABLES 7-4, 7-5, & 7-6 FOR SMALLER CONDUCTOR SIZES.

7. DIMENSIONS IN BRACKETS [ ] ARE IN MILLIMETERS ROUNDED OFF TO THE NEAREST MILLIMETER, UNLESS OTHERWISE NOTED, AND ARE FOR REFERENCE ONLY.

8. NOT RECOMMENDED FOR USE IN HIGHLY CORROSIVE ENVIRONMENT.

CONNECTOR SIZE	TOLERANCES L
8C - 25	±.09
26 - 34	±.12
35 AND UP	±.15

TO ORDER BURNDY® PRODUCTS CALL

UNITED STATES
1-800-346-4175 (LONDONDERRY, NH)

CANADA:
1-800-361-6975 (QUEBEC)
1-800-387-6487 (ALL OTHER PROVINCES)

FOR PRODUCT INFO: http://www.burndy.com

UNIVERSAL TERMINAL

ITEM NO:	N/A	
CAT. NO:	KA2-U (TABLE)	
DRAWN BY:	P. LAPONIUS	04/10/97
CHECKER:	J. MICHAUD	04/21/97
DSN APPVL:	K. MELLO	04/30/97
MFG APPVL:	--	--
QA APPVL:	D. VARIO	05/02/97
MKT APPVL:	P. WERTHMAN	05/01/97
PROD FAM:	CM&R_Mechanical	
PROJECT #:	--	
DOCUMENT TYPE:	Sales	
REL LEVEL:	In Work	

BURNDY

SCALE: 1:1

SIZE	DRAWING NO	REV
D	SE210997	R

SHEET 2 OF 5

REV: PE0200