No reproduction of this drawing is allowed written permission of WEG Motores

EIXO		
PADRÃO	X	Dimensões em polegadas
OPCIONAL		Dimensions in inches
ESPECIAL		

CERTIFIED WEG MOTORES
Certified document. Not subject to changes.

THIS IS AN UPDATED REVISION, THE PREVIOUS ONE MUST BE DISREGARDED.

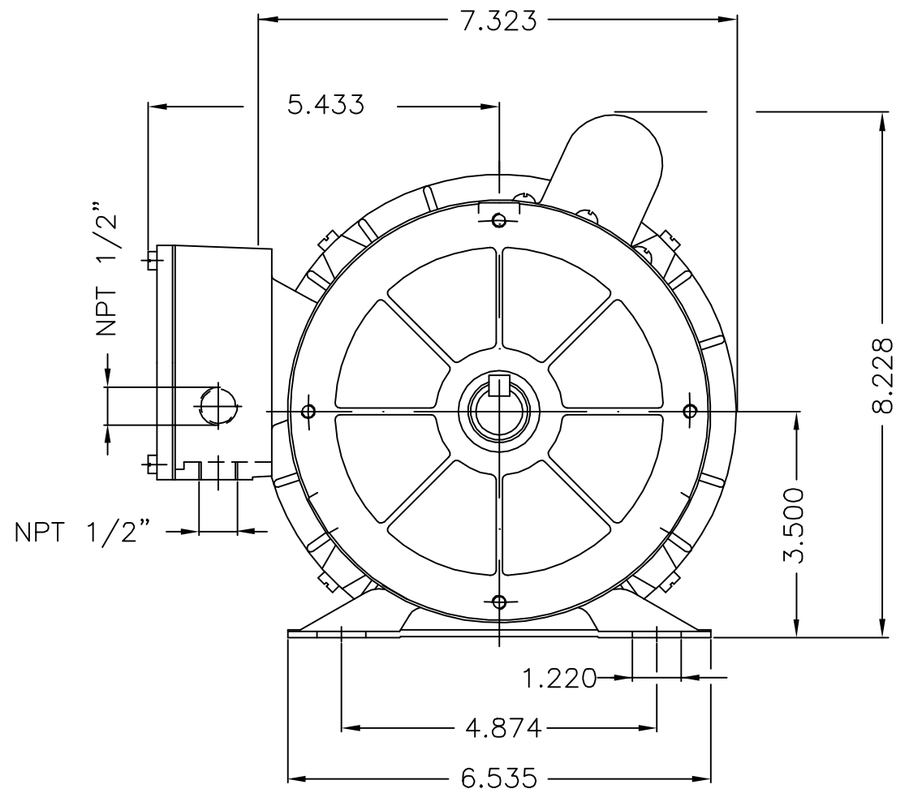

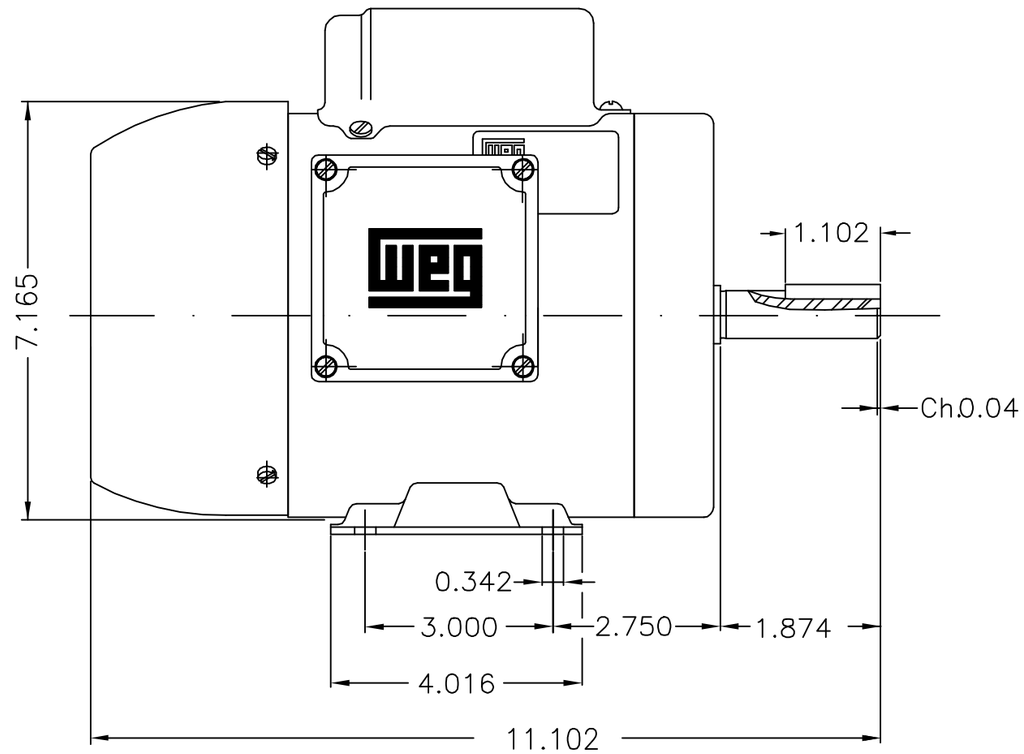

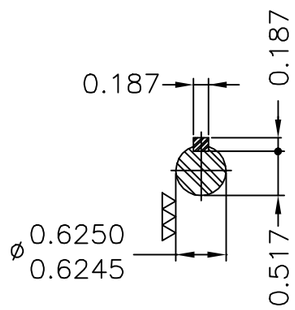

Protetor Térmico Automático / Automatic Overload Protector
Forma construtiva B3D / Mounting B3R(D)

GREENHECK FAN

MODIF. NUMBER	LOC	SUMMARY OF MODIFICATIONS	EXECUTED	CHECKED	RELEASED	DATE	VER
500000421549		ALTERADO PARA CERTIFICADO	JOSIANEH		GILBERTOW	04.03.2011	01
500000413778		DOCUMENTO NOVO	JOSIANEH		EMERSONRH	10.02.2011	00

EXECUTED	JOSIANEH	SINGLE PHASE MOTOR FRAME B56 IP55 (TEFC) VENTILADOR	10001127191 000 01
CHECKED			
RELEASED	EMERSONRH		
REL. DATE	10.02.2011	WMO-JGS JARAGUÁ DO SUL ENG. MOTORES MONOFÁSICOS	FOL/SHEET 1 / 1

1/2 HP 04 Poles 60Hz 409472760 A

UNCONTROLLED COPY

RELEASED

ZME - A3

Propriedade da WEG. Proibida reprodução sem autorização prévia./WEG's property. Forbidden reproduction without previous authorization.