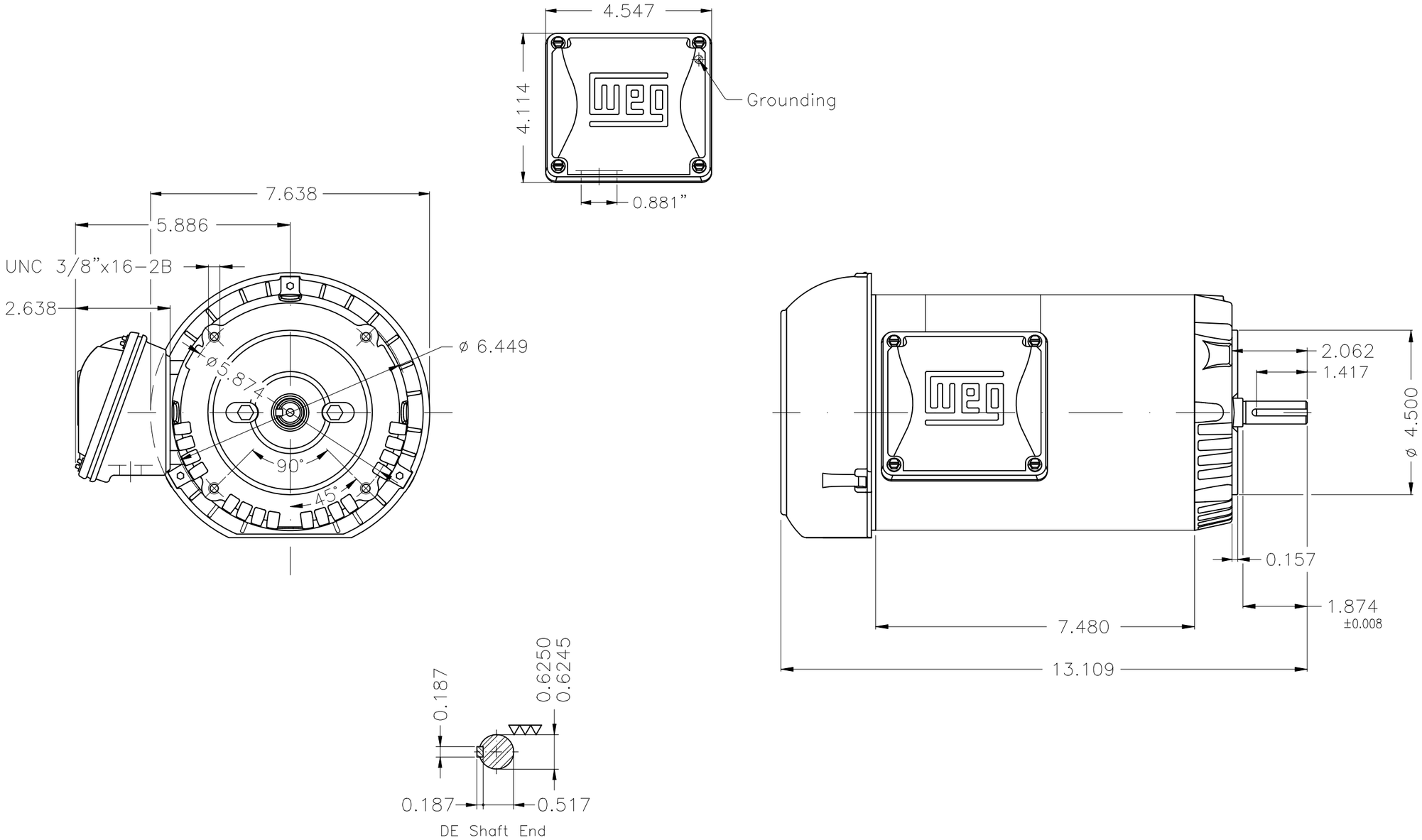

Color Munsell N 1 matte black

Painting plan 207N

Mounting F-1/B14R(D)

ECM	LOC	SUMMARY OF MODIFICATIONS	EXECUTED	CHECKED	RELEASED	DATE	VER
			HYBRISUSER				00

EXECUTED	HYBRISUSER	THREE PH. MOTOR ROLLED STEEL	PREVIEW
CHECKED		FRAME 56C IP55 TEFC	WDD 00
RELEASED			
REL. DATE		WMO Jaragua do Sul Product Engineering	SHEET 1 / 1

1.5 HP 04 Poles 60 Hz

A

Dimensions in inches

A3

XME

WEG's property. Forbidden reproduction without previous authorization.