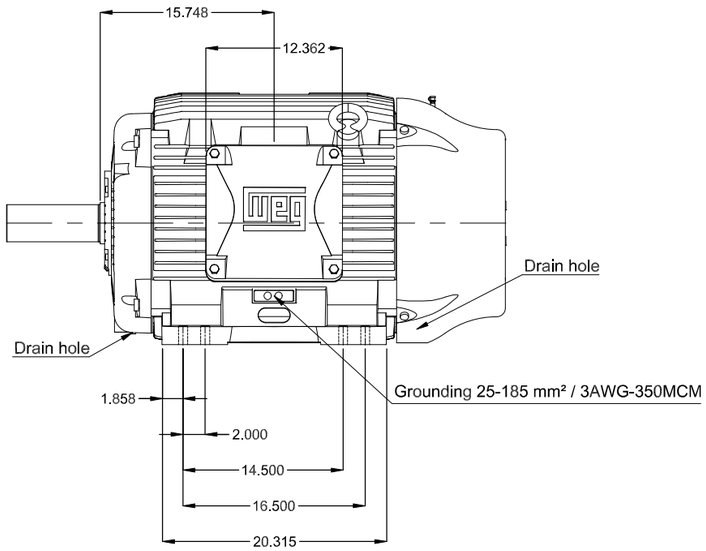

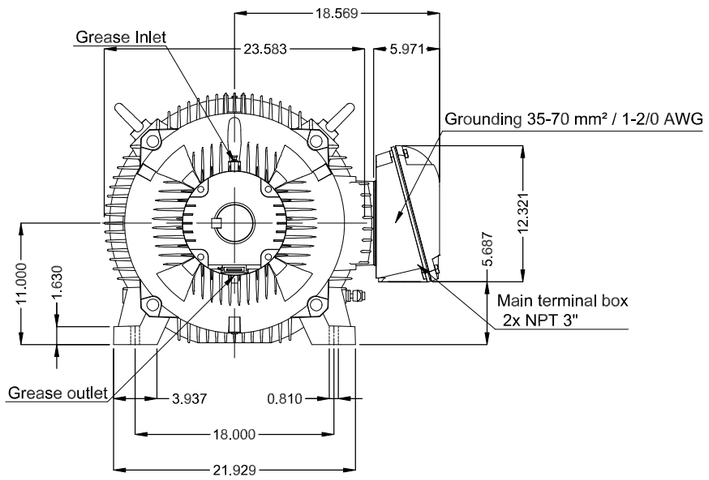

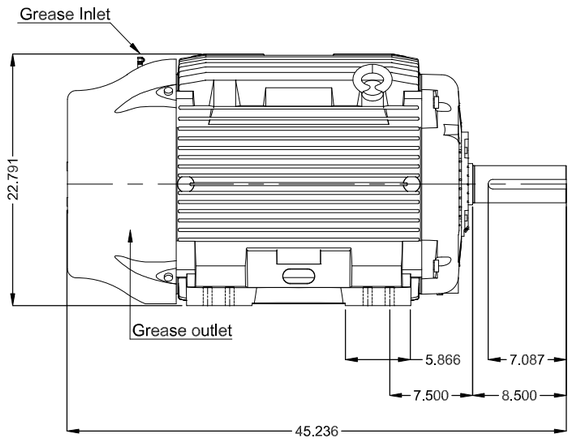

Without vertical jackscrews	
Aluminum fan	
Color RAL 9010	
Painting plan 203A	
Mounting NEMA F-2	
Mounting B3L(E)	

DE Shaft End

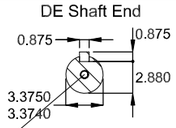

DUNC 3/4"-10 WEG WPR-7339

75 HP 06 Poles 60 Hz | A

ECM	LOC	SUMMARY OF MODIFICATIONS	EXECUTED	CHECKED	RELEASED	DATE	VER
			HYBRISUSER				00

EXECUTED	HYBRISUSER
CHECKED	
RELEASED	
REL. DATE	

THREE PH. MOTOR W22
FRAME 444/5T IP55 TEFC

PREVIEW

WDD 00

SHEET /

Dimensions in inches

A3

WEG's property. Forbidden reproduction without previous authorization.