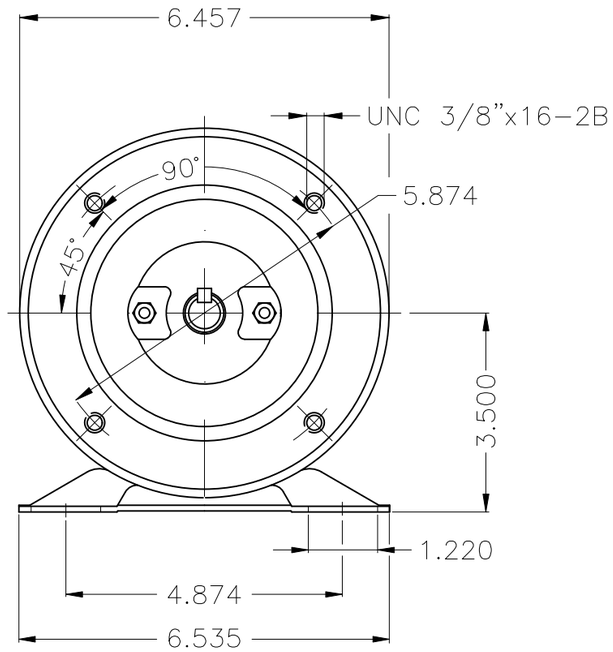

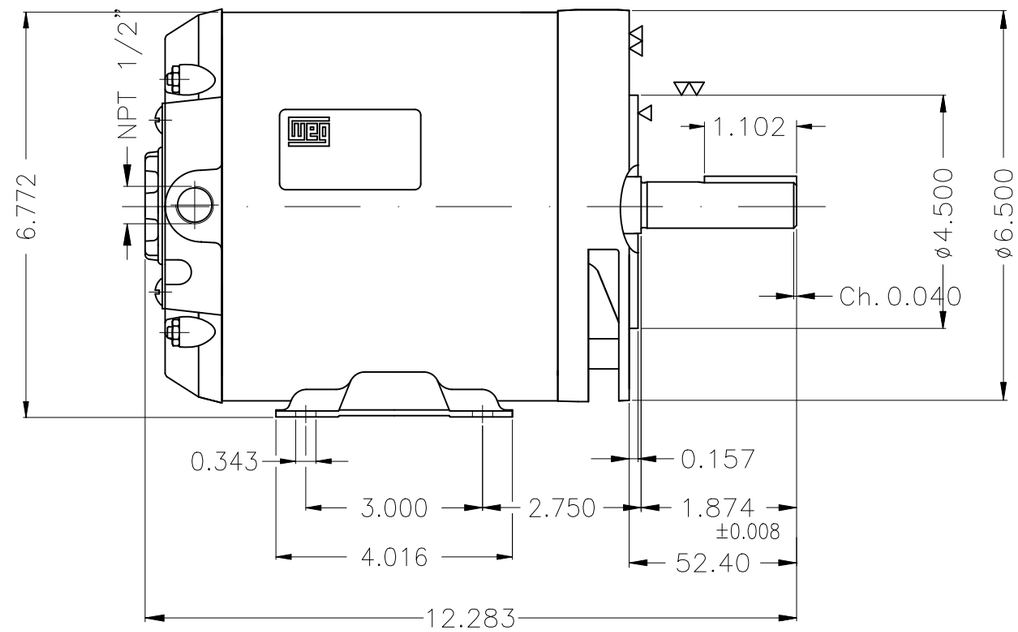

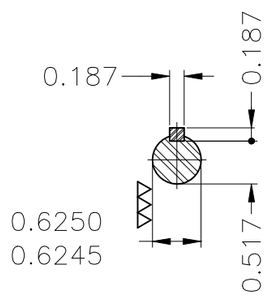

Without switch off thermal protection
Bearing cap
Painting plan 207N
Mounting B34R(D)

ECM	LOC	SUMMARY OF MODIFICATIONS	EXECUTED	CHECKED	RELEASED	DATE	VER
			HYBRISUSER				00

EXECUTED	HYBRISUSER	THREE PH. MOTOR GENERAL
CHECKED		FRAME D56C IP21 ODP
RELEASED		
REL. DATE		WMO Jaragua do Sul Product Engineering

PREVIEW
WDD 00
SHEET 1 / 1

2 HP 02 Poles 60 Hz

A

Dimensions in inches

XME A3

WEG's property. Forbidden reproduction without previous authorization.