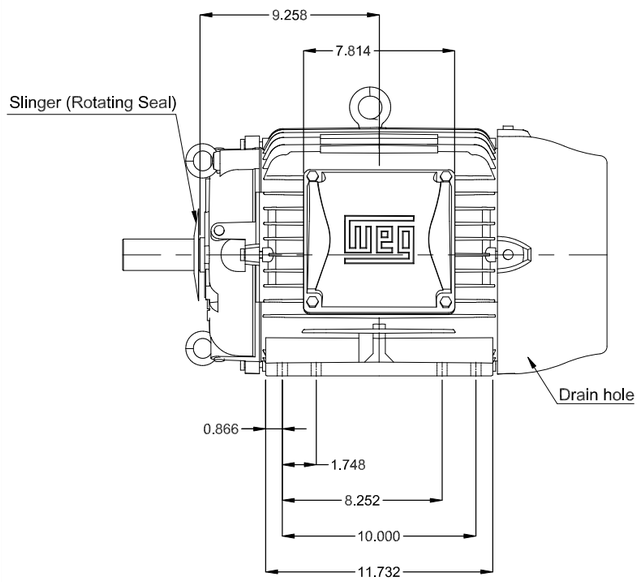

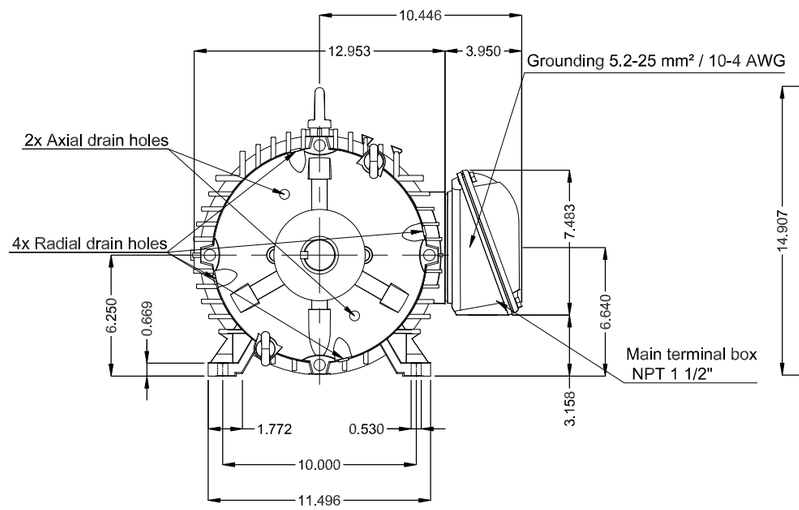

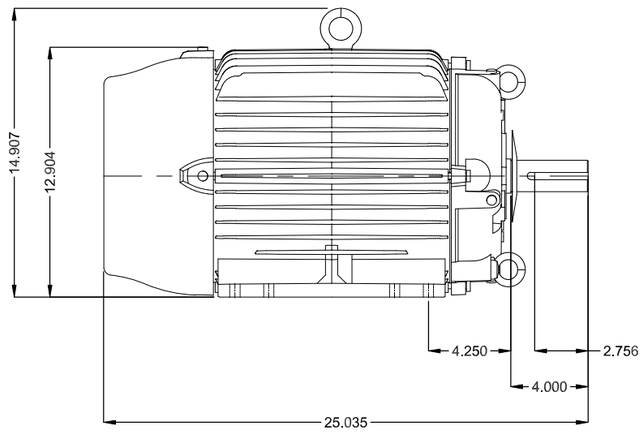

DE Shaft End

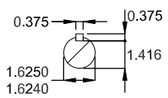

Color RAL 5009

Painting plan 222E

Mounting NEMA F-2

Mounting B3L(E)

2.5/10 HP 08/04 Poles 60 Hz | A

ECM	LOC	SUMMARY OF MODIFICATIONS	EXECUTED	CHECKED	RELEASED	DATE	VER
			HYBRISUSER				00

EXECUTED	HYBRISUSER	THREE PH. MOTOR COOLING TOWER W22 HIGH EFF.
CHECKED		FRAME 254/6T IP55 TEFC
RELEASED		
REL. DATE		

PREVIEW

WDD 00

SHEET /

Dimensions in inches

A3

WEG's property. Forbidden reproduction without previous authorization.