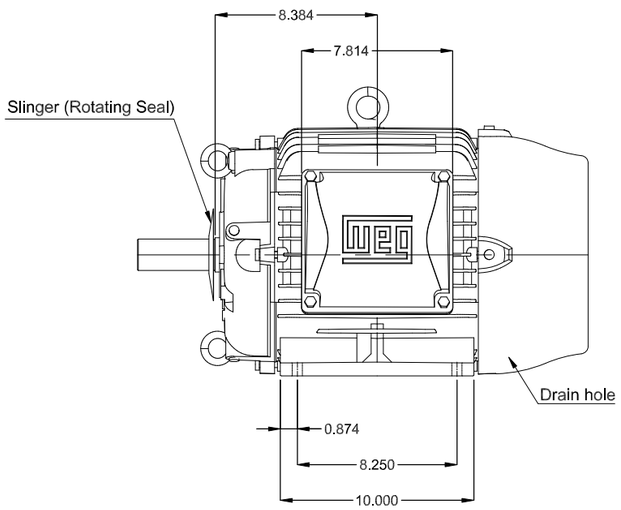

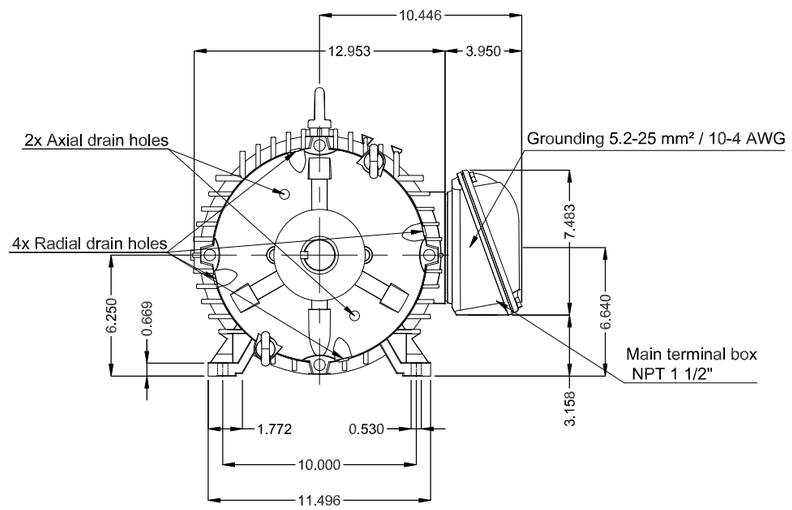

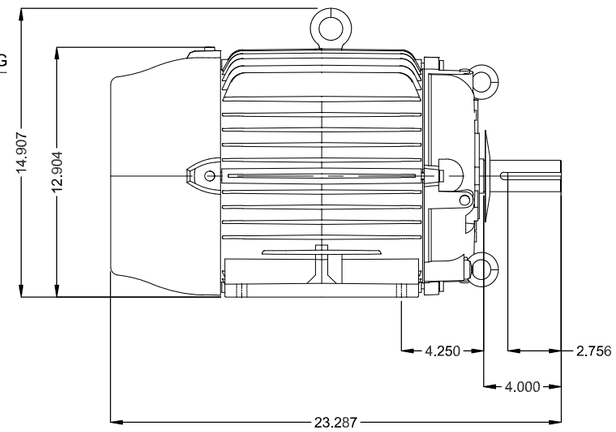

Without vertical jackscrews
Color RAL 5009
Painting plan 222E
Mounting NEMA F-2
Mounting B3L(E)

DE Shaft End

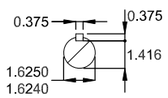

3.75/15 HP 08/04 Poles 60 Hz | A

ECM	LOC	SUMMARY OF MODIFICATIONS	EXECUTED	CHECKED	RELEASED	DATE	VER
			HYBRISUSER				00

EXECUTED	HYBRISUSER
CHECKED	
RELEASED	
REL. DATE	

THREE PH. MOTOR COOLING TOWER W22 HIGH EFF.
FRAME 254T IP55 TEFC

PREVIEW
WDD 00
SHEET /

Dimensions in inches

A3

WEG's property. Forbidden reproduction without previous authorization.