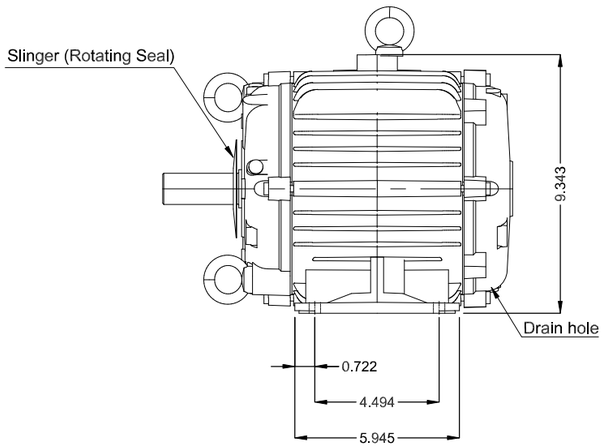

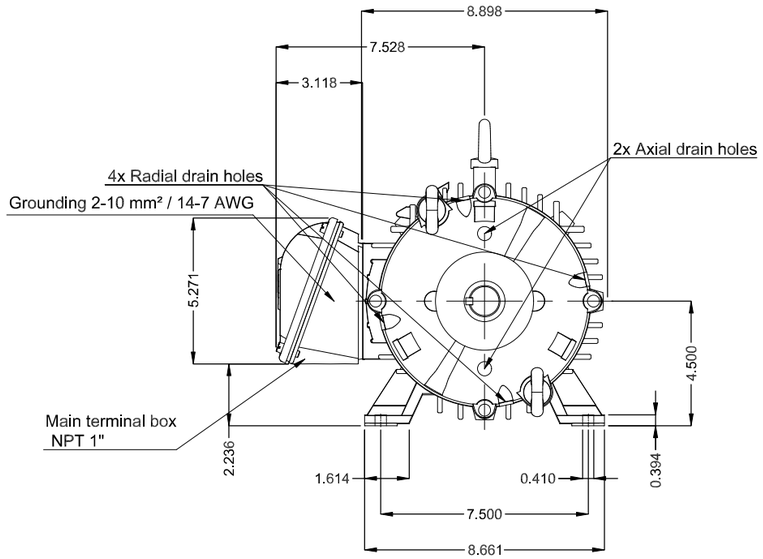

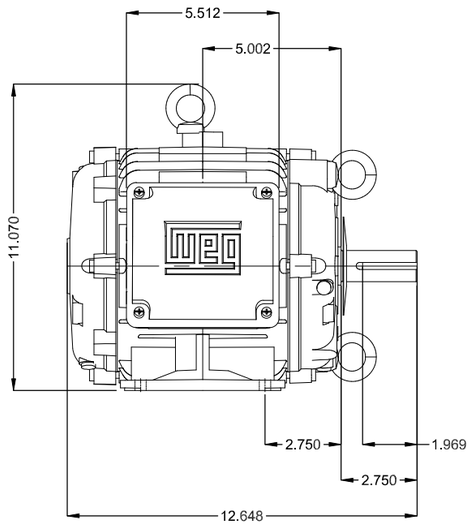

Without fan	
Without fan cover	
Color RAL 5009	
Painting plan 202E	
Mounting NEMA F-1	
Mounting B3R(D)	

DE Shaft End

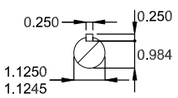

3 HP 04 Poles 60 Hz | A

ECM	LOC	SUMMARY OF MODIFICATIONS	EXECUTED	CHECKED	RELEASED	DATE	VER
			HYBRISUSER				00

EXECUTED	HYBRISUSER
CHECKED	
RELEASED	
REL. DATE	

THREE PH. MOTOR COOLING TOWER W22 NEMA PREM. EFF.
FRAME 182T IP55 TEAO

PREVIEW

WDD 00

SHEET /

Dimensions in inches

A3

WEG's property. Forbidden reproduction without previous authorization.