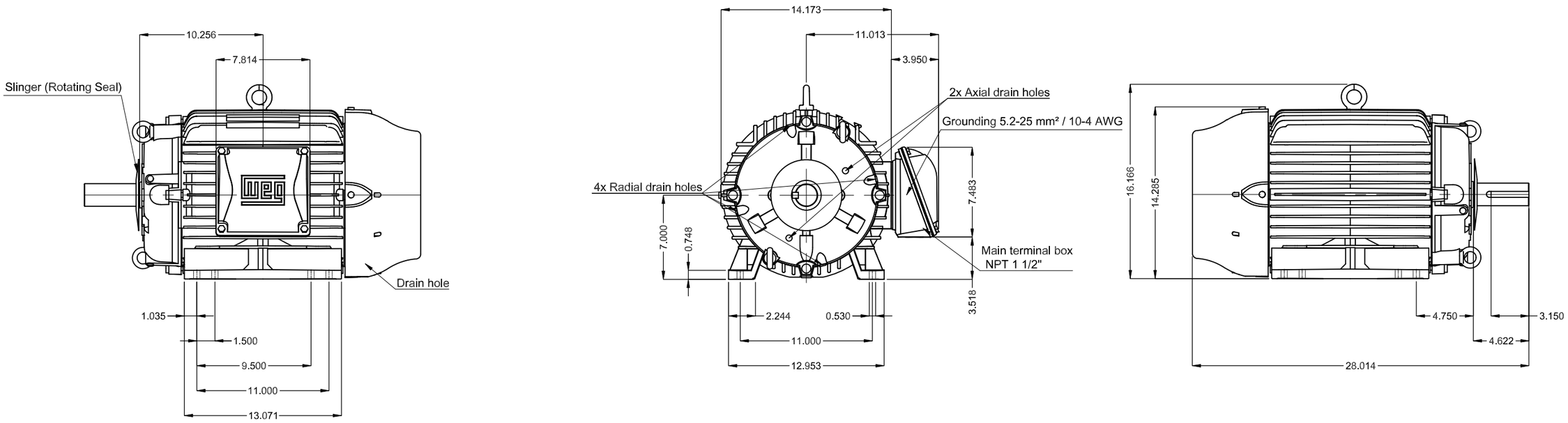

Without vertical jackscrews
Color RAL 5009
Painting plan 202E
Mounting NEMA F-2
Mounting B3L(E)

DE Shaft End

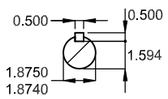

5.0/20 HP 08/04 Poles 60 Hz | A

ECM	LOC	SUMMARY OF MODIFICATIONS	EXECUTED	CHECKED	RELEASED	DATE	VER
			HYBRISUSER				00

EXECUTED	HYBRISUSER	THREE PH. MOTOR COOLING TOWER W22 HIGH EFF.
CHECKED		FRAME 284/6T IP55 TEFC
RELEASED		
REL. DATE		

PREVIEW
WDD 00
SHEET /

Dimensions in inches

A3

WEG's property. Forbidden reproduction without previous authorization.