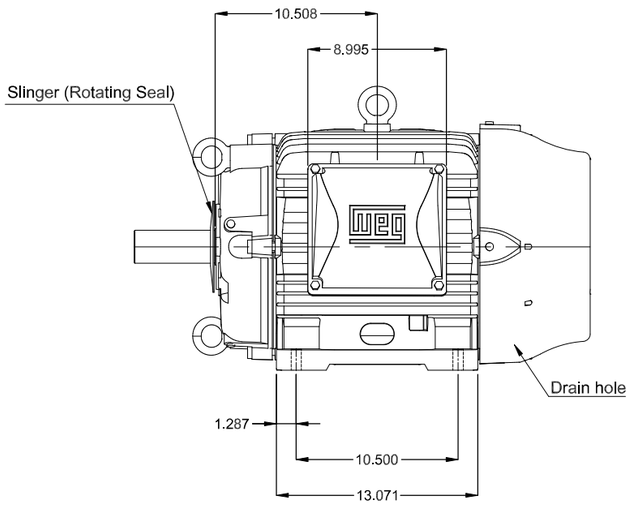


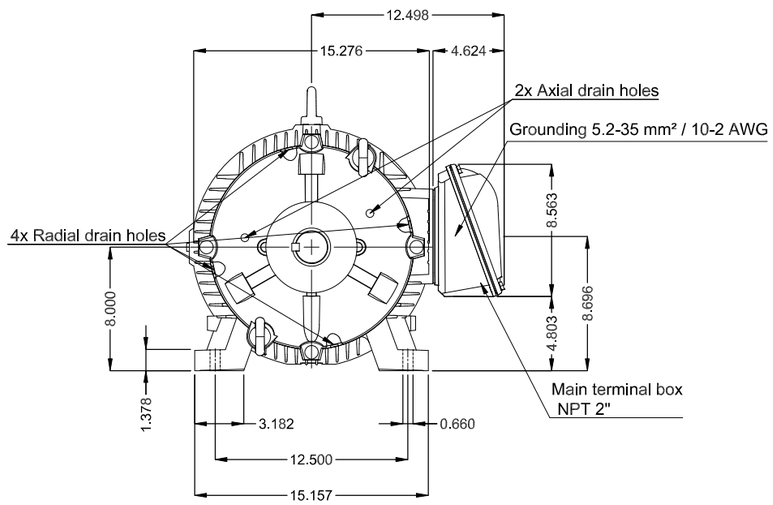


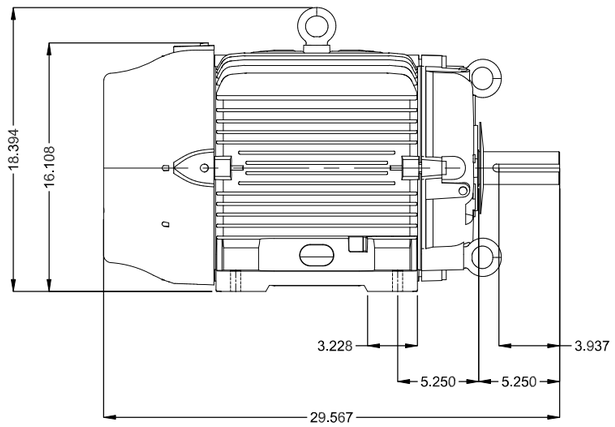


Without vertical jackscrews
Color RAL 5009
Painting plan 222E
Mounting NEMA F-2
Mounting B3L(E)

DE Shaft End

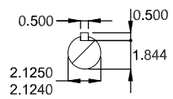


7.5/30 HP 08/04 Poles 60 Hz | A

| ECM | LOC | SUMMARY OF MODIFICATIONS | EXECUTED | CHECKED | RELEASED | DATE | VER |
|---|---|---|---|---|---|---|---|
| | | | HYBRISUSER | | | | 00 |

| | |
|---|---|
| EXECUTED | HYBRISUSER |
| CHECKED | |
| RELEASED | |
| REL. DATE | |

THREE PH. MOTOR COOLING TOWER W22 HIGH EFF.
FRAME 324T IP55 TEFC

PREVIEW
WDD 00
SHEET /

Dimensions in inches

A3

WEG's property. Forbidden reproduction without previous authorization.