EIXO/SHAFT		
PADRÃO/STANDARD	X	Dimensões em polegadas
OPCIONAL/OPTIONAL		Dimensions in inches
ESPECIAL/SPECIAL		

CERTIFIED
WEG MOTORES
Certified document.
Not subject to changes.

THIS IS AN UPDATED REVISION, THE PREVIOUS ONE MUST BE DISREGARDED.

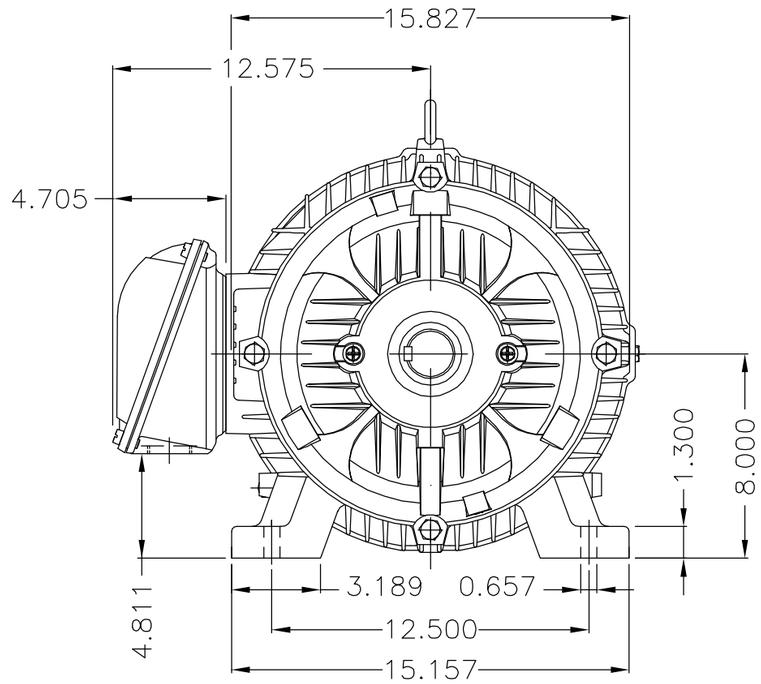

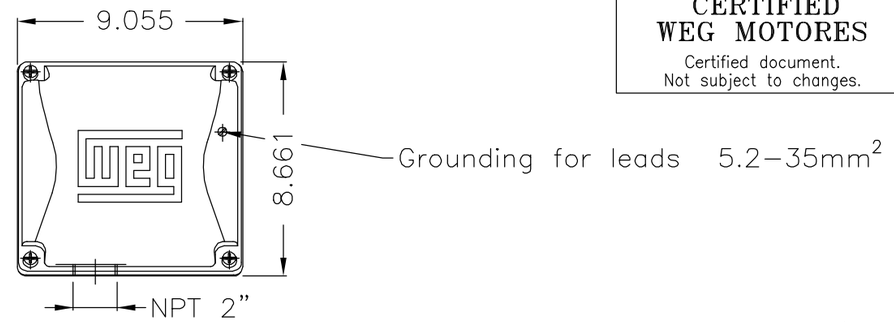

Main terminal box

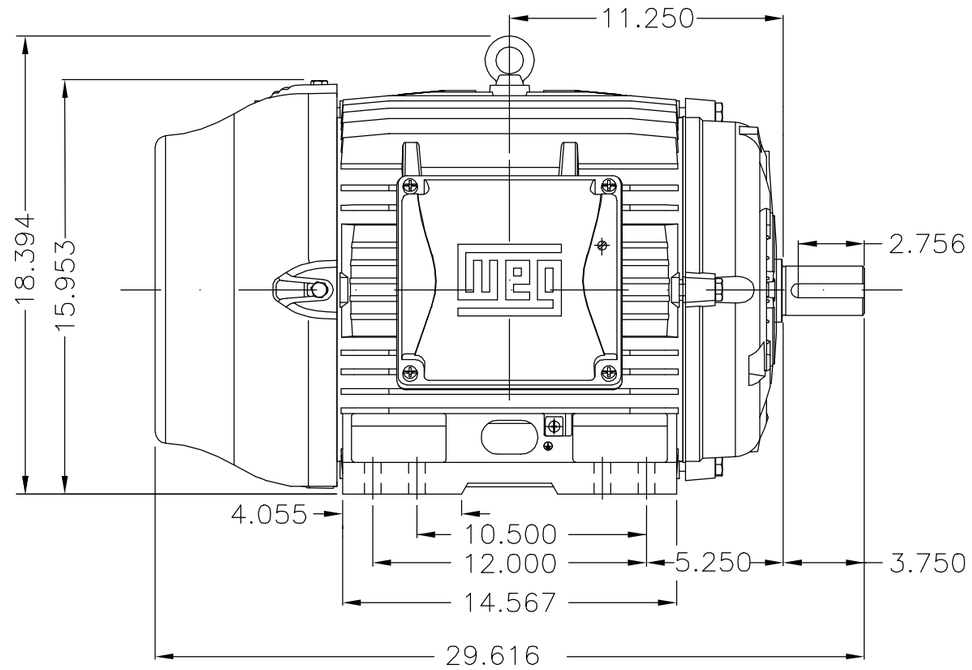

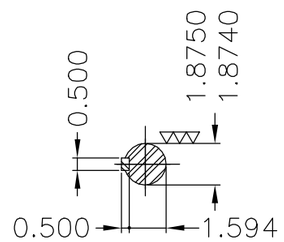

DE Shaft End

Anel interno especial de fixação do rolamento dianteiro /
Special internal fastening bearing cap of DE bearing

Kit porta escova de aterramento AEGIS SGR–70.4–3MFH / Brush holder kit AEGIS SGR–70.4–3MFH

Plano de pintura 203A / Painting plan 203A

Forma construtiva NEMA F–1 / Mounting NEMA F–1

Forma construtiva B3D / Mounting B3R(D)

WEG ELECTRIC CORPORATION – WEC

ECM	LOC	SUMMARY OF MODIFICATIONS	EXECUTED	CHECKED	RELEASED	DATE	VER
500001555542		ALT. CONFORME CLAIM 415202866	RBOECK	ALISSON	ALISSON	08.02.2019	03
500001037256		REMOVIDO REPRESENTAÇÃO ATERR	ALESOMZ	ODORIZZI	ODORIZZI	18.07.2015	02

EXECUTED	SCARMAGNANI	THREE PHASE W22 MOTOR - NEMA PREMIUM EFF	10002805159
CHECKED	DAYANAR	FRAME 324/6TS IP55	000 03
RELEASED	DAYANAR		
REL DT	09.04.2014	WMO JARAGUA DO SUL ENGENHARIA DE PRODUTO	SHEET 1 / 1

50 HP	02 Poles	60Hz	413384812/0	MEC	B
40 HP	02 Poles	60Hz	413384810/0	MEC	A

UNCONTROLLED COPY

RELEASED

ZME A3

WEG's property. Forbidden reproduction without previous authorization.