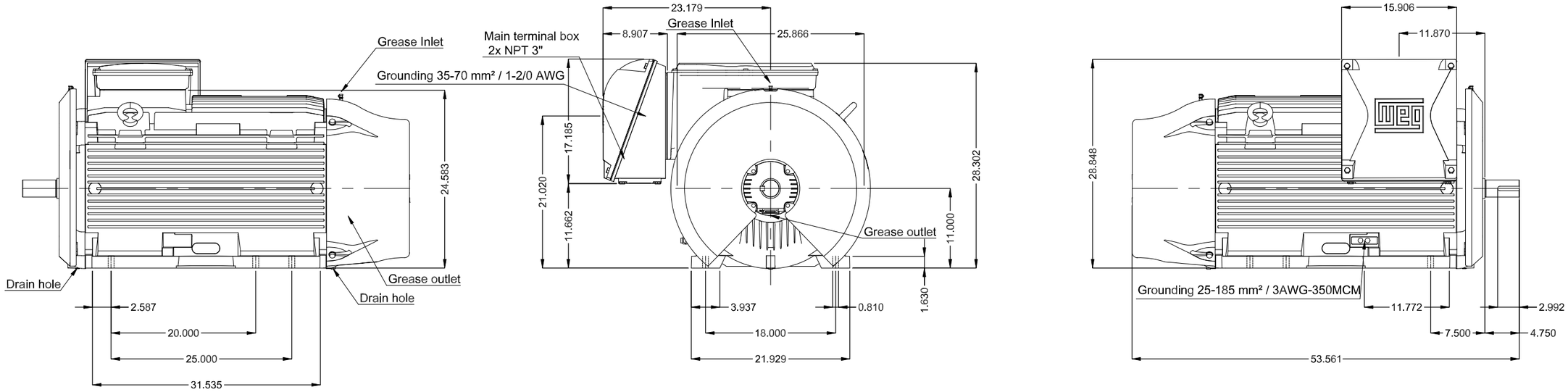

TS shaft end	
NDE endshield with electrically insulated bearing hub	
Drive-End Air Deflector	
Color RAL 5009	
Painting plan 203A	
Mounting B3R(D)	

DE Shaft End

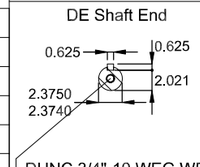

DUNC 3/4"-10 WEG WPR-7339

400 HP 04 Poles 60 Hz | A

ECM	LOC	SUMMARY OF MODIFICATIONS	EXECUTED	CHECKED	RELEASED	DATE	VER
			HYBRISUSER				00

EXECUTED	HYBRISUSER
CHECKED	
RELEASED	
REL. DATE	

THREE PH. MOTOR W22 NEMA PREM. EFF.
FRAME L447/9TS IP55 TEFC

PREVIEW

WDD 00

SHEET /

Dimensions in inches

A3

WEG's property. Forbidden reproduction without previous authorization.