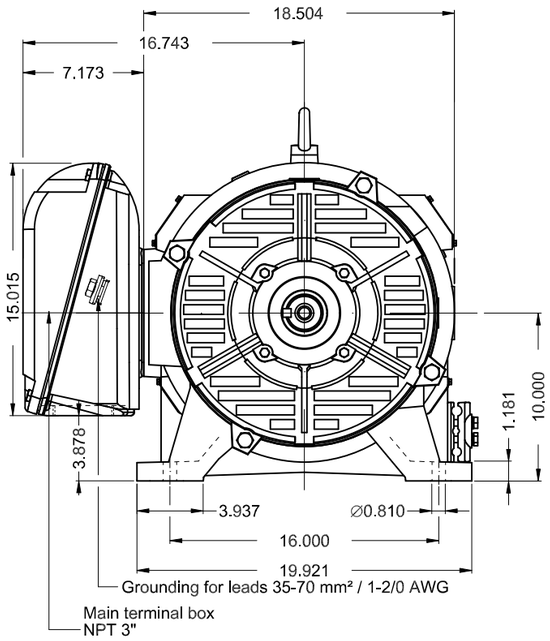

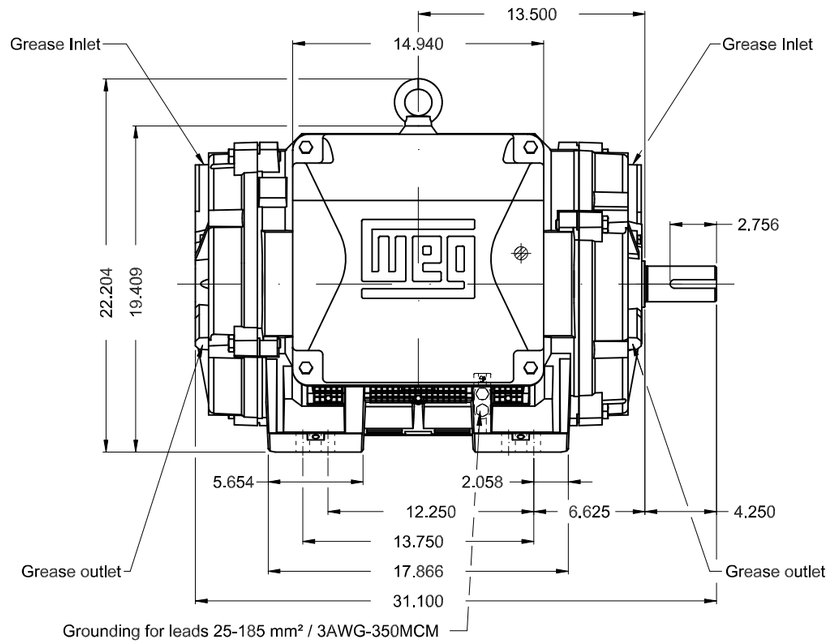

TS shaft end
Shaft material - SAE/ABNT 1040/45
Internal AEGIS ground ring on the DE
Color RAL 5009
Painting plan 203A
Mounting NEMA F-1
Mounting B3R(D)

DE Shaft End

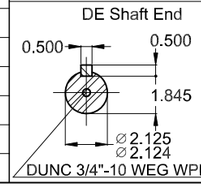

100 HP 04 Poles 60 Hz | A

1:9

ECM	LOC	SUMMARY OF MODIFICATIONS	EXECUTED	CHECKED	RELEASED	DATE	VER
			HYBRISUSER				00

EXECUTED	HYBRISUSER	THREE PH. MOTOR W40 NEMA PREM. EFF.	PREVIEW
CHECKED		FRAME 404/5TS IP23 ODP	WDD 00
RELEASED			
REL. DATE		WMO Jaragua do Sul Product Engineering	SHEET 1 / 1

Dimensions in inches

XME A3

WEG's property. Forbidden reproduction without previous authorization.