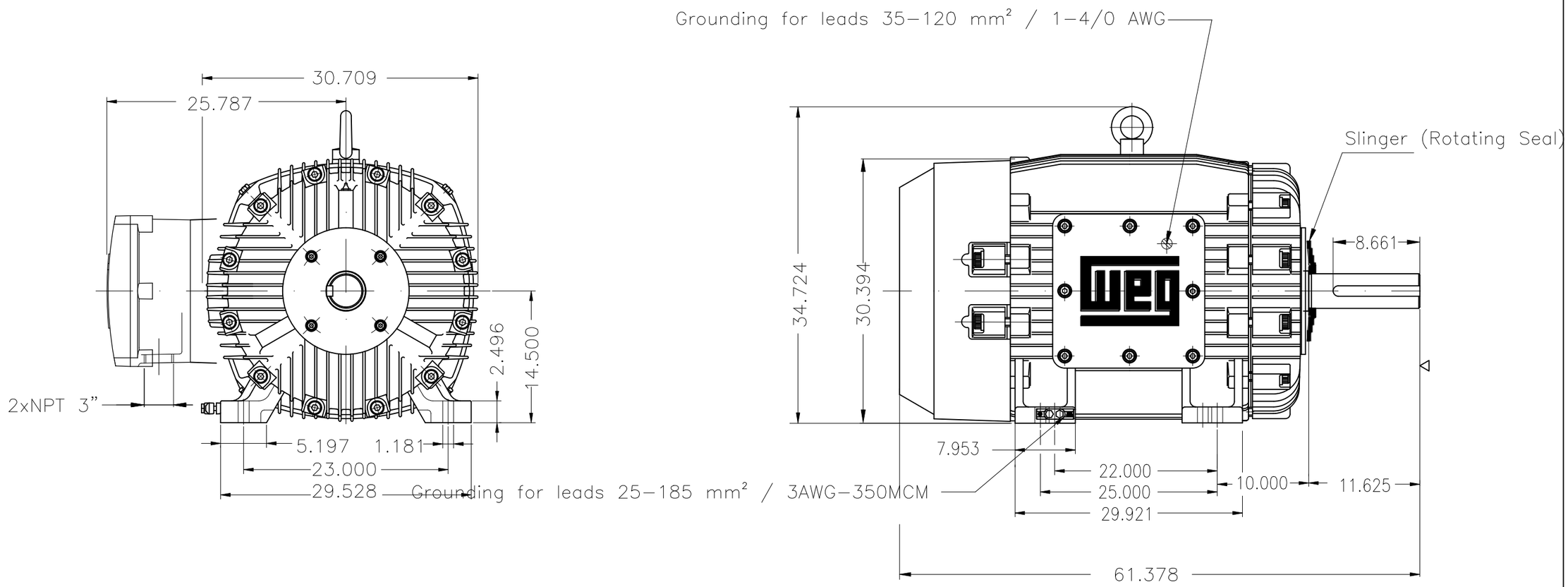

DE Shaft End

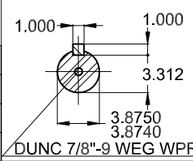

DUNC 7/8"-9 WEG WPR-7339

Without bearing sealing
Color RAL 5009
Painting plan 222P
Mounting B3R(D)

500 HP 04 Poles 60 Hz | A

ECM	LOC	SUMMARY OF MODIFICATIONS	EXECUTED	CHECKED	RELEASED	DATE	VER
			HYBRISUSER				00

EXECUTED	HYBRISUSER	THREE PH. MOTOR EXPLOSION PROOF HIGH EFF.
CHECKED		FRAME 586/7T IP54 TEFC
RELEASED		
REL. DATE		WMO Jaragua do Sul Product Engineering

PREVIEW
WDD 00
SHEET 1 / 1

Dimensions in inches
XME A3

WEG's property. Forbidden reproduction without previous authorization.