No reproduction of this drawing is allowed written permission of WEG Motores

EIXO	
PADRÃO	X
OPCIONAL	
ESPECIAL	

Dimensões em polegada
Dimensions in inches

THIS IS AN UPDATED REVISION, THE PREVIOUS ONE MUST BE DISREGARDED.

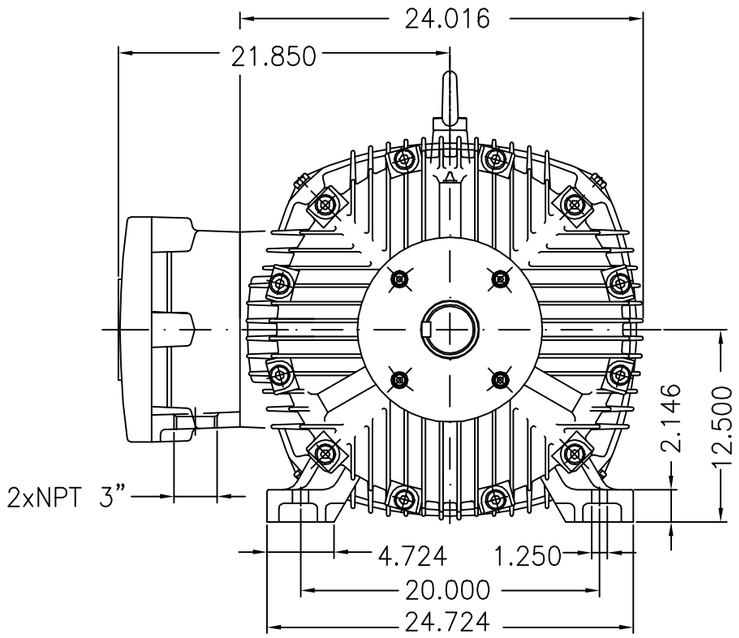

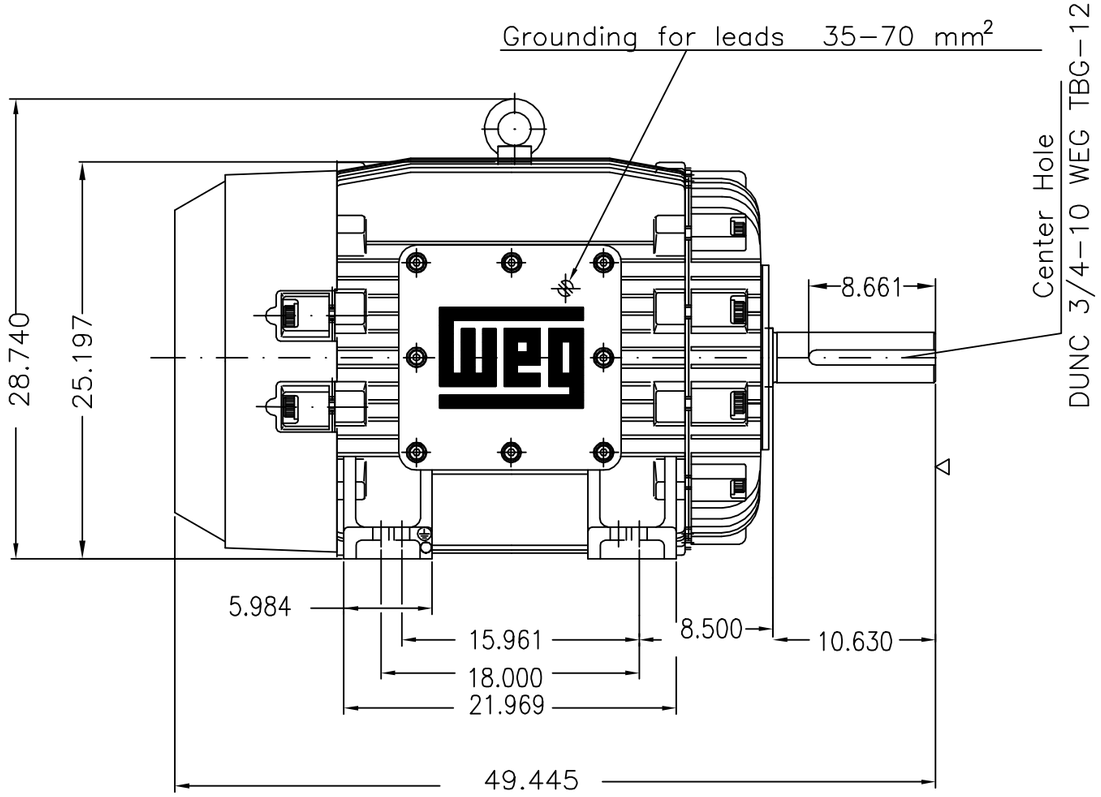

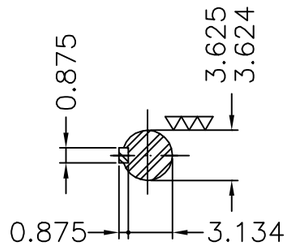

Dreno Exd sinterizado / Sintered drain hole Exd
Forma construtiva B3D / Mounting B3R(D)

WEM

125 HP 8 POLE 60 Hz	E
150 HP 8 POLE 60 Hz	D
200 HP 6 POLE 60 Hz	C
250 HP 4 POLE 60 Hz	B
200 HP 4 POLE 60 Hz	A

MODIF. NUMBER	LOC	SUMMARY OF MODIFICATIONS	EXECUTED	CHECKED	RELEASED	DATE	VER
500000261569		ATUAL. NOTA DRENO	OSEIASI		OSEIASI	13.01.2010	09
500000234951		ALT. DE IP54 P/ IP55	RICLAV				08

EXECUTED	FABIOMP	THREE PHA. EXPL. PRO. MOTOR – HIGH EFF. FRAME 504/5T IP55
CHECKED		
RELEASED	ADRIANAP	
REL. DATE	22.08.2008	WMO JARAGUA DO SUL ENGE. DE MOTORES INDUSTRIAIS

E3005854
000 09
FOL/SHEET 01 / 01

UNCONTROLLED COPY
RELEASED
ZME – A3

Propriedade da WEG. Proibida reprodução sem autorização prévia./WEG's property. Forbidden reproduction without previous authorization.