No reproduction of this drawing is allowed written permission of WEG Motores

EIXO	
PADRÃO	
OPCIONAL	
ESPECIAL	X

Dimensões em polegada
Dimensions in inch

FOR APPROVAL
( ) Approved
( ) Approved with comments
( ) Not approved

THIS IS AN UPDATED REVISION, THE PREVIOUS ONE MUST BE DISREGARDED.

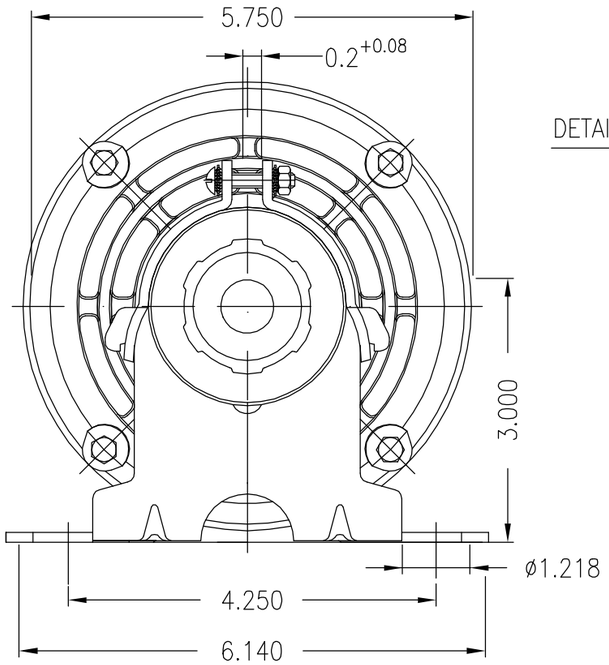

DETAIL "Y"

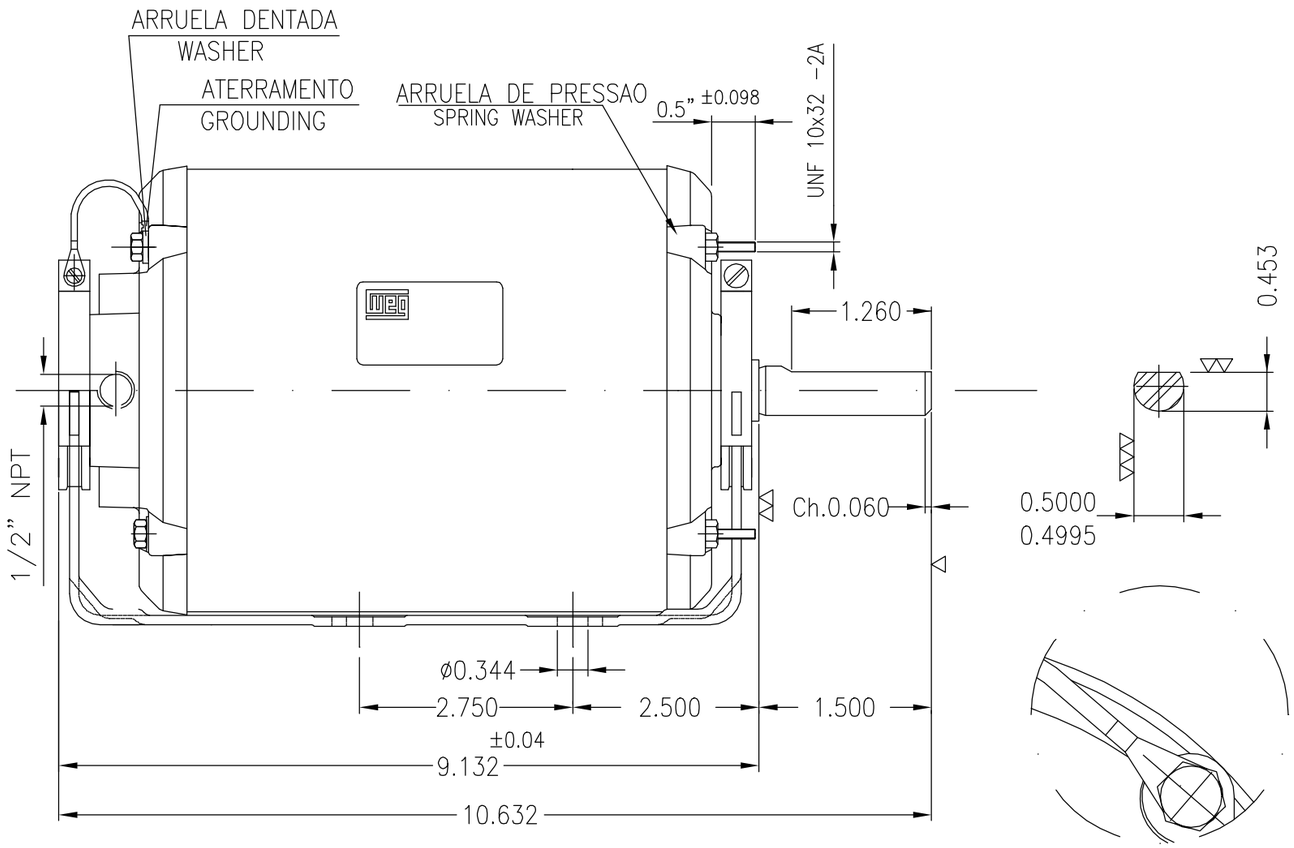

DETAIL "Y"

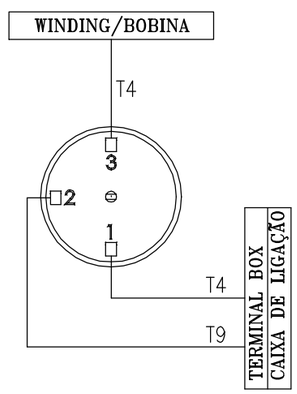

ESQUEMA DE LIGAÇÃO DO PROTETOR TERMICO
CONNECTION DIAGRAM OF THE THERMAL PROTECTOR

Bitola do cabo de ligação 18 AWG (0.82mm) / Connection cable cross section: 18 AWG (0.82mm)
Tampa da caixa de ligação especial / Special T-box cover
Indicar SFA na etiqueta de identificação / Indicate SFA (Service Factor Amps) in the nameplate
Torque de aperto 2.5 a 3.5 N.m. nos parafusos das abraçadeiras /
Tigthen torque 2.5 a 3.5 N.m. for clamp bolts
Cabos coloridos com numeração / Colored cables with numbering
Parafusos tampa cx. lig. tipo Philips+fenda / Terminal box cover with screw Philips slotted head
Protetor térmico fenólico – automático / Phenolic thermal protector – automatic
Forma construtiva B3D / Mounting {0}

WEG ELECTRIC CORPORATION – WEC

ECM	LOC	SUMMARY OF MODIFICATIONS	EXECUTED	CHECKED	RELEASED	DATE	VER
500001151728		ALT. CONFORME ECM.	TOBIASR		DEYKSON	09.03.2016	01
500000291481		DOCUMENTO NOVO	JOSIANEH		DEISEM	25.03.2010	00

EXECUTED	JOSIANEH	SPLIT PHASE MOTOR RESILIENT BASE	10000796644
CHECKED		FRAME B48Z IP21 (ODP)	000 01
RELEASED	DEISEM	VENTILADOR	
REL DT	25.03.2010	WMO JARAGUÁ DO SUL ENG. MOTORES MONOFÁSICOS	SHEET 1 / 1

1/4 HP 04 Poles 60Hz MODEL .25180S1BRB0B48 401776680 A

UNCONTROLLED COPY
RELEASED
ZME A3

WEG's property. Forbidden reproduction without previous authorization.