EIXO/SHAFT		Dimensões em polegadas Dimensions in inches
PADRÃO/STANDARD	X	
OPCIONAL/OPTIONAL		
ESPECIAL/SPECIAL		

CERTIFIED
WEG MOTORES
Certified document.
Not subject to changes.

THIS IS AN UPDATED REVISION, THE PREVIOUS ONE MUST BE DISREGARDED.

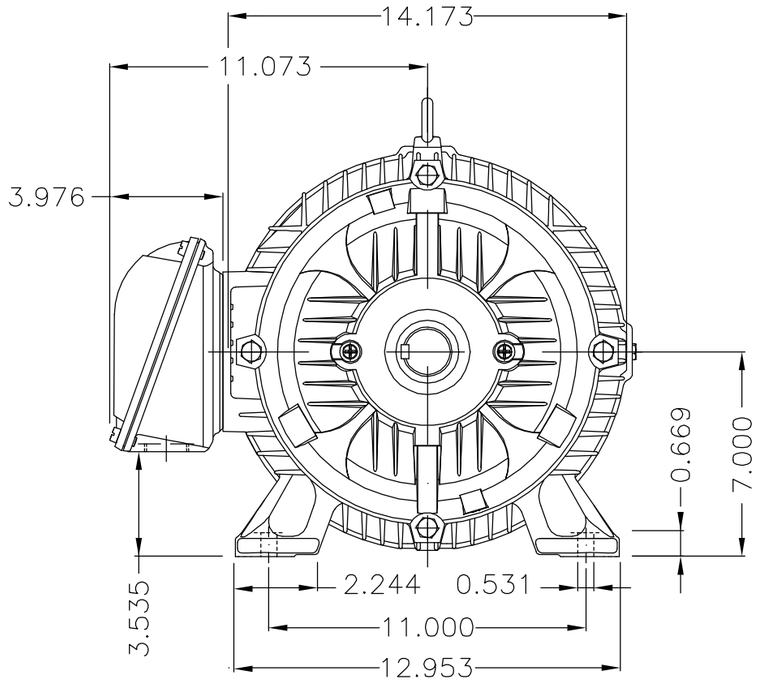

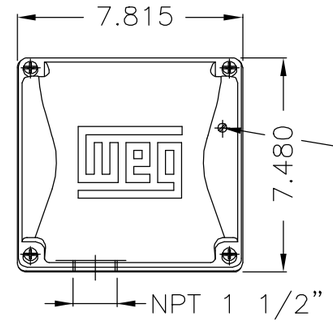

Main terminal box

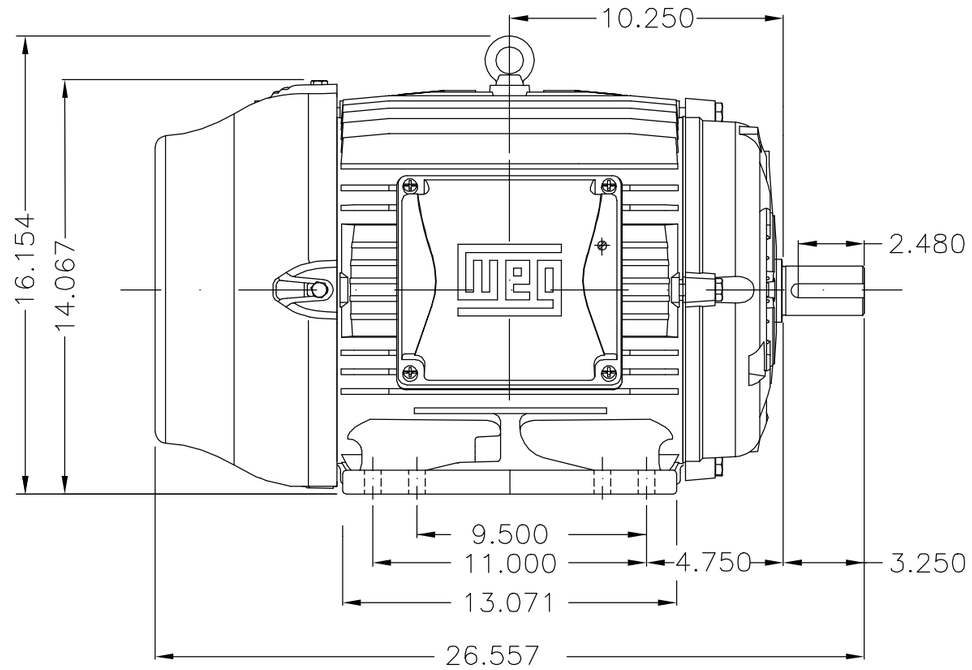

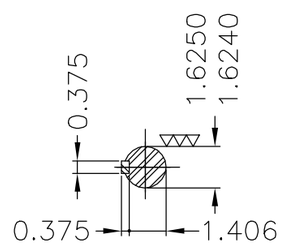

DE Shaft End

Kit porta escova de aterramento AEGIS SGR-63.0-3MFH / Brush holder kit AEGIS SGR-63.0-3MFH
Plano de pintura 203A / Painting plan 203A
Forma construtiva NEMA F-1 / Mounting NEMA F-1
Forma construtiva B3D / Mounting B3R(D)

WEG ELECTRIC CORPORATION – WEC

ECM	LOC	SUMMARY OF MODIFICATIONS	EXECUTED	CHECKED	RELEASED	DATE	VER
500001674319		ALTERADO CFME. CLAIM 415477818	ELIOM	ALISSON	ALISSON	20.01.2020	04
500001285066		CORRIGIDO NOTA	GEVERSON	MARLONBD	MARLONBD	10.03.2017	03

EXECUTED	SCARMAGNANI	THREE PHASE W22 MOTOR - NEMA PREMIUM EFF FRAME 284/6TS IP55	10002805128
CHECKED	DAYANAR		000 04
RELEASED	DAYANAR		
REL DT	09.04.2014	WMO JARAGUA DO SUL ENGENHARIA DE PRODUTO	SHEET 1 / 1

30 HP	02 Poles	60Hz	413384808/0	MEC	B
25 HP	02 Poles	60Hz	413384806/0	MEC	A

UNCONTROLLED COPY
RELEASED
ZME A3

WEG's property. Forbidden reproduction without previous authorization.