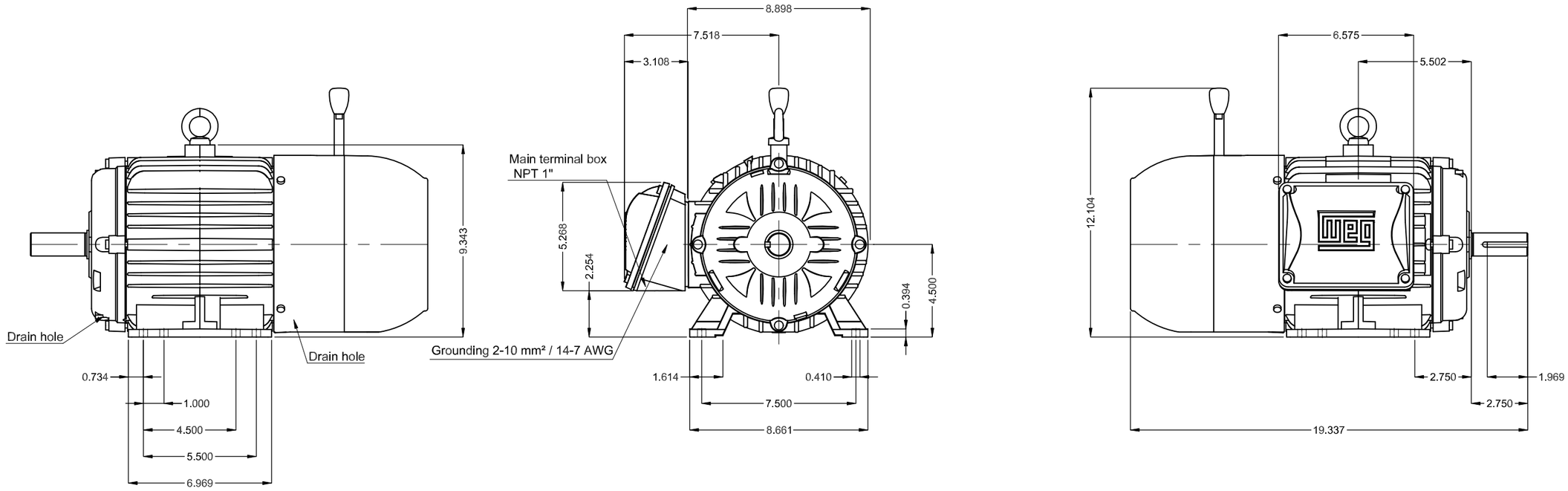

With brake 14 (60 Nm)
Color RAL 5009
Painting plan 207A
Mounting NEMA F-1
Mounting B3R(D)

DE Shaft End

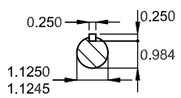

3 HP 02 Poles 60 Hz | A

ECM	LOC	SUMMARY OF MODIFICATIONS	EXECUTED	CHECKED	RELEASED	DATE	VER
			HYBRISUSER				00

EXECUTED	HYBRISUSER
CHECKED	
RELEASED	
REL. DATE	

THREE PH. MOTOR W22 BRAKE MOTOR NEMA PREM. EFF.
FRAME 182/4T IP55 TEFC

PREVIEW
WDD 00
SHEET /

Dimensions in inches

A3

WEG's property. Forbidden reproduction without previous authorization.