No reproduction of this drawing is allowed written permission of WEG Motores

EIXO	
PADRÃO	
OPCIONAL	
ESPECIAL	X

THIS IS AN UPDATED REVISION, THE PREVIOUS ONE MUST BE DISREGARDED.

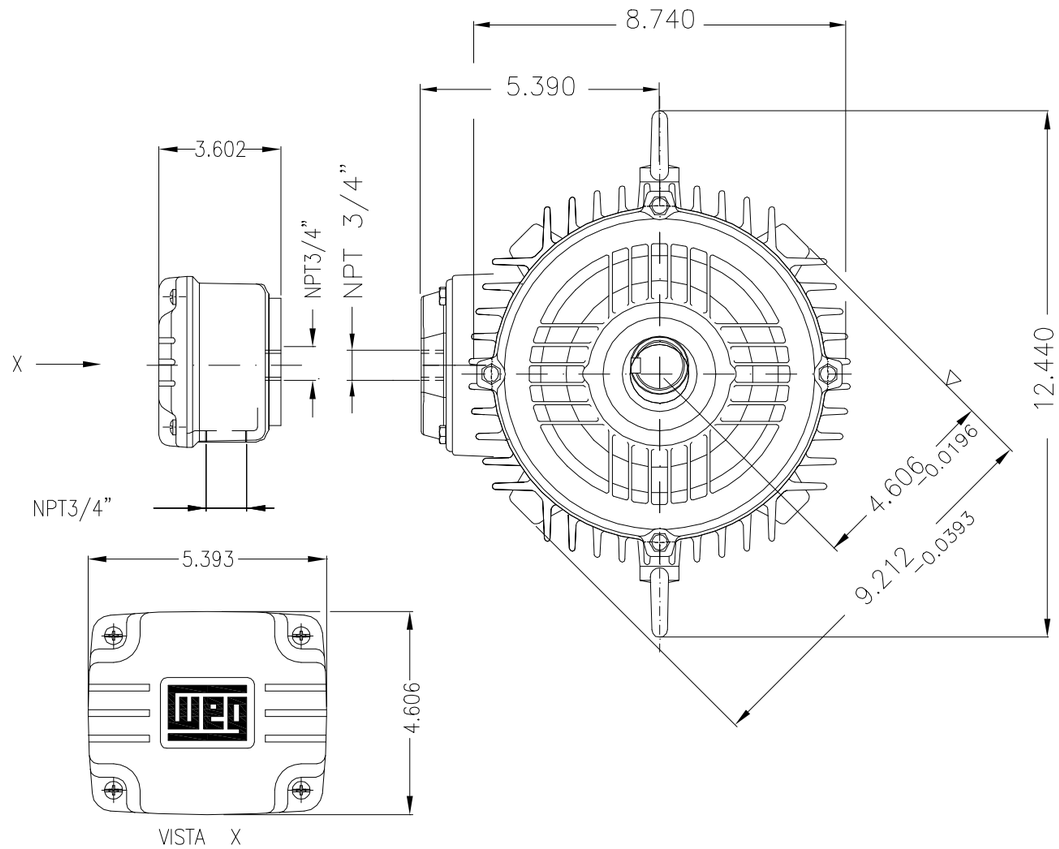

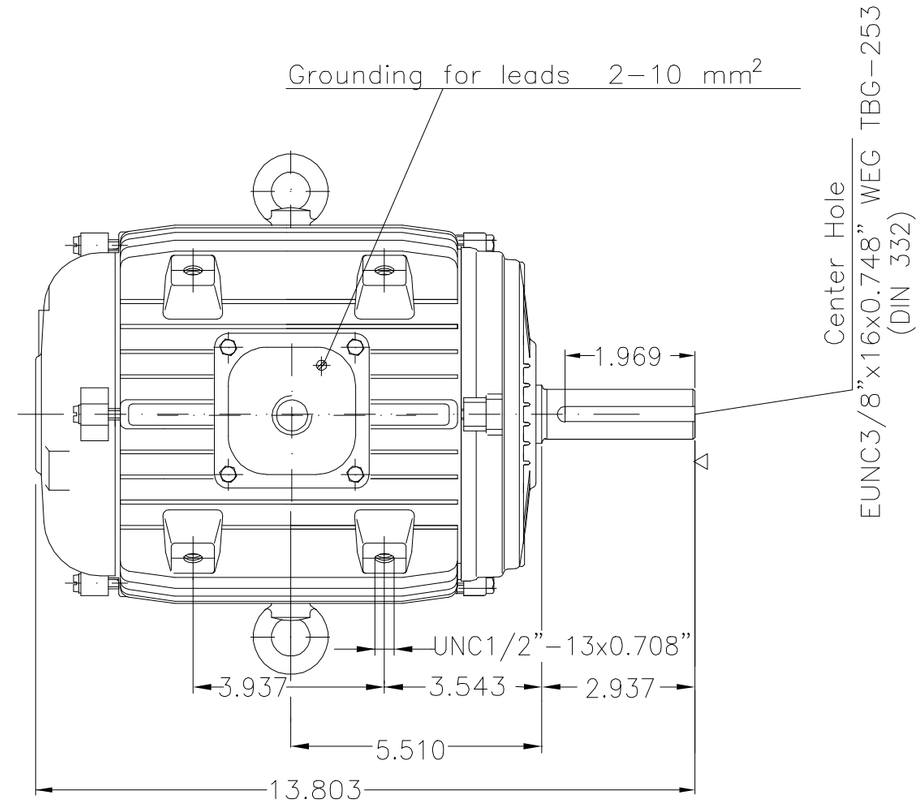

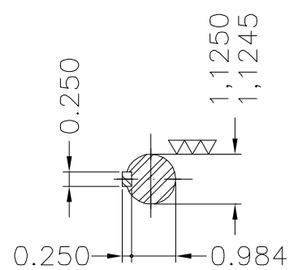

Categoria B / Design B	
Capa plástica de proteção dos cabos de ligação do motor (Item 0121.0408) / Extended leads to be packed inside plastic bag (Item 0121.0408)	
Utilizar fita adesiva (mica) para proteção dos cabos / Tape protection arround leads on frame exit	
Comprimento dos cabos de ligação 1000+50mm a partir da base / Connection leads 1000+50mm length from base	
Placa de identificação especial / Special nameplate	
Motor com caixa de ligação + 1 base em avulso com a mesma rosca da base fixa no motor / Loose terminal box with back cover with threaded hole as cables exiting	
Com duas placas de identificação, sendo uma amarrada no olhal / With two set of nameplates, being one attached on the eyebolt	
Isolamento Classe F (Dt=80K) / Class F insulation – 80K temperature rise	
Fator de serviço 1.25 / Service factor 1.25	
Forma construtiva B30D / Mounting B30D	
AMERICAN FAN	

GROSS WEIGHT		kg	NET WEIGHT	kg		SCALE		
500000187632		ALT. CONFORME CLAIM 400454417		CARLOSD		ANDERSONLB	14.05.2009	02
500000036273		RETIRADO FD'S (400126003)		AMORIM		ORLANDOS	30.04.2008	01
MODIF. NUMBER	LOC	SUMMARY OF MODIFICATIONS		EXECUTED	CHECKED	RELEASED	DATE	VER

0,75 HP 8 POLE 60Hz		F
1 HP 8 POLE 60Hz		E
3 HP 4 POLE 60Hz		D
5 HP 2 POLE 60Hz		C
3 HP 2 POLE 60Hz	X3836.03.03 MEC	B
5 HP 4 POLE 60Hz	X3836.03.04 MEC	A

EXECUTED	SIMONES	THREE PH. FAN AND EXHAUST MOTOR HIGH EFF	10000037426	
CHECKED		FRAME 184Y IP55 T.E.A.O.	000	02
RELEASED	ADRIANAP			
REL. DATE	19.02.2008	WMO JARAGUÁ DO SUL ENG. MOTORES INDUSTRIAIS	SHEET	01 / 01

UNCONTROLLED COPY

RELEASED

ZME – A3

WEG's property. Forbidden reproduction without previous authorization.