No reproduction of this drawing is allowed written permission of WEG Motores

EIXO	
PADRÃO	X
OPCIONAL	
ESPECIAL	

Dimensões em polegada
Dimensions in inch

THIS IS AN UPDATED REVISION, THE PREVIOUS ONE MUST BE DISREGARDED.

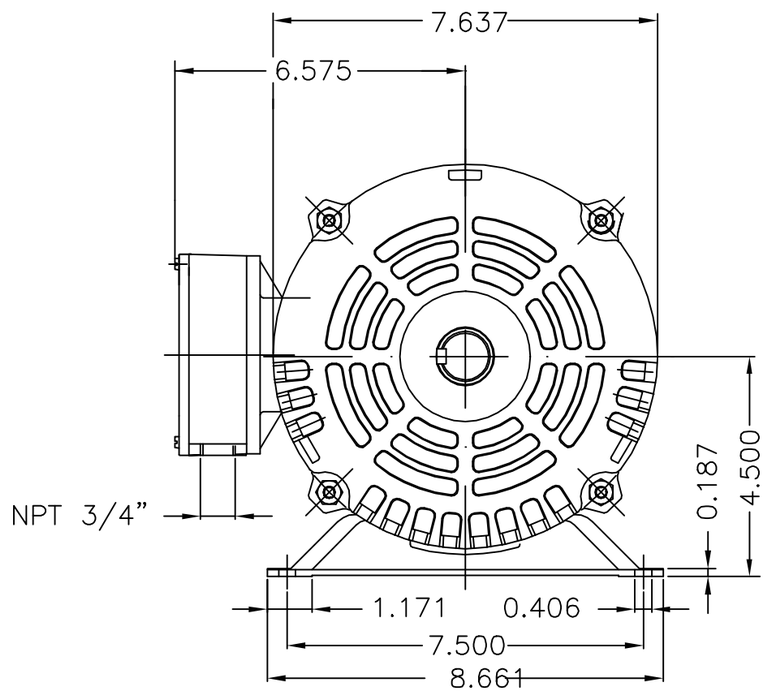

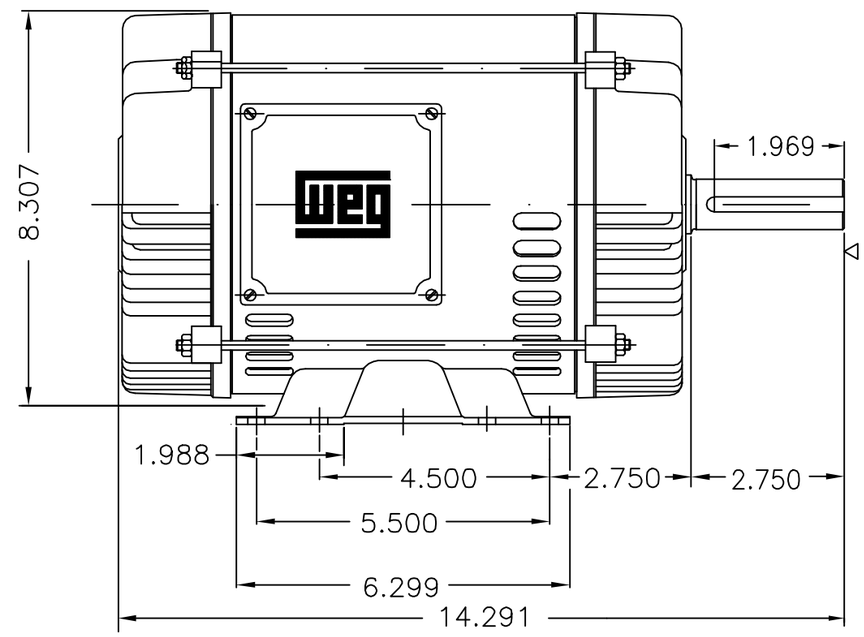

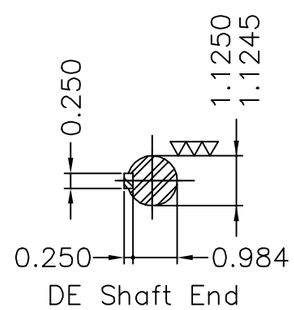

Conectado em 230 V / Connected to the 230 V
Pintar motor após montagem / Paint motor after assembly
Cabos de ligação numerados com etiqueta / Leads are labeled
Cabos de ligação sem terminais / Connection leads without terminals
Plano de pintura 207A / Painting plan 207A
Forma construtiva B3D / Mounting B3R(D)

WEG ELECTRIC CORP. – SUWANEE

MODIF. NUMBER	LOC	SUMMARY OF MODIFICATIONS	EXECUTED	CHECKED	RELEASED	DATE	VER
500000298964		ALT. CONFORME CLAIM 402079398	ANDERSONLB		ISRAELM	22.04.2010	03
500000291155		ALT. CONFORME CLAIM 401372997	ISRAELM		ISRAELM	23.03.2010	02

EXECUTED	AMACEDO	THREE PHASE MOTOR HIGH EFFICIENCY	10000579384
CHECKED		FRAME 184T IP21	000 03
RELEASED	ADRIANAP		
REL. DATE	05.08.2009	WMO-JGS JARAGUÁ DO SUL ENGENHARIA DE PRODUTO	FOL/SHEET 1 / 1

5 HP	04 Poles	60Hz		B
7.5 HP	02 Poles	60Hz	400511426/0 ELE/MEC	A

UNCONTROLLED COPY

RELEASED

ZME-A3

Propriedade da WEG. Proibida reprodução sem autorização prévia./WEG's property. Forbidden reproduction without previous authorization.