No reproduction of this drawing is allowed written permission of WEG Motores

EIXO	
PADRÃO	X
OPCIONAL	
ESPECIAL	

Dimensões em polegadas
Dimensions in inches

THIS IS AN UPDATED REVISION, THE PREVIOUS ONE MUST BE DISREGARDED.

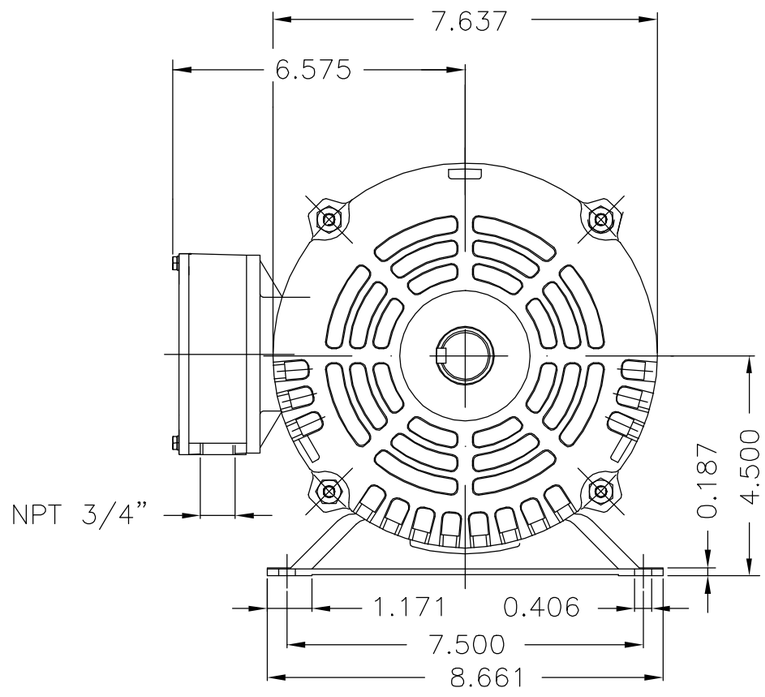

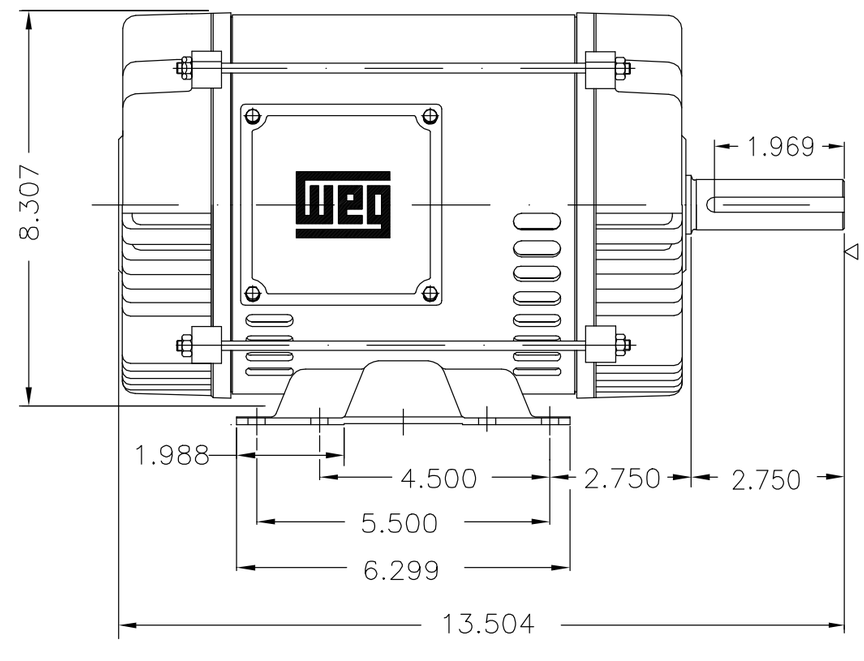

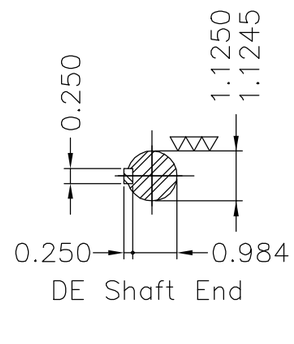

Cabos de ligação sem terminais / Connection cables without terminals
Cabos de ligação numerados com etiqueta / Cables are labeled
Fixar tampa da caixa de ligação com parafuso sextavado externo com tratamento organometálico
Terminal box cover with hexagonal screws with organometallic treatment
Plano de pintura 207A / Painting plan 207A
Forma construtiva B3D / Mounting B3R(D)

WEG ELECTRIC CORPORATION – WEC

ECM	LOC	SUMMARY OF MODIFICATIONS	EXECUTED	CHECKED	RELEASED	DATE	VER
500001541718		ALT. CONFORME CLAIM 415253612	JAMORIM	RICLAV	RICLAV	20.12.2018	02
500000369617		ATUAL. CONF. CLAIM 405898950	ALCIDESZ	SCARMAGNAN	SCARMAGNANI	06.10.2010	01

EXECUTED	ALCIDESZ	THREE PHASE PREMIUM EFFICIENCY	10000991473
CHECKED	MAIKONP	FRAME 182T IP21	000 02
RELEASED	MAIKONP		
REL DT	05.10.2010	WMO-JGS JARAGUÁ DO SUL ENG. MOTORES INDUSTRIAIS	SHEET 1 / 1

3 HP 04 Poles 60Hz 405898950/0 A

UNCONTROLLED COPY
RELEASED
ZME A3

WEG's property. Forbidden reproduction without previous authorization.