EJE/SHAFT	
ESTÁNDAR/STANDARD	X
OPCIONAL/OPTIONAL	
ESPECIAL/SPECIAL	

Dimensiones en pulgadas
Dimensions in inches

PRELIMINARY DOCUMENT
Not to be used for installation purposes.

THIS IS AN UPDATED REVISION, THE PREVIOUS ONE MUST BE DISREGARDED.

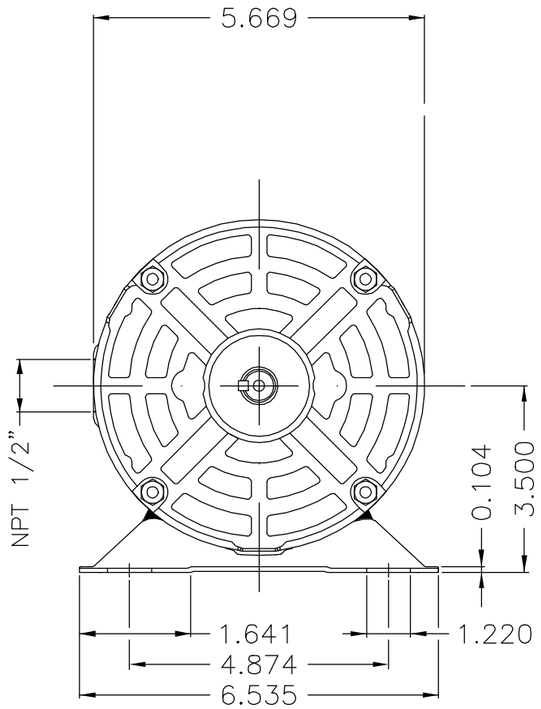

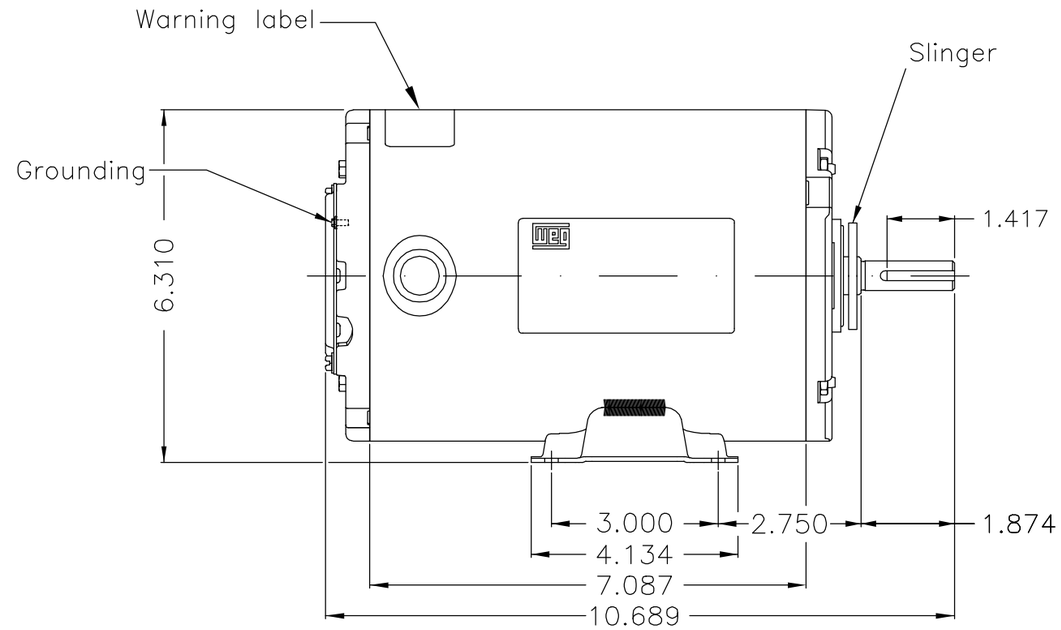

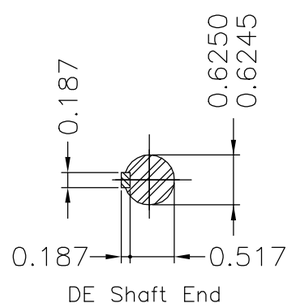

Indicación etiqueta de advertencia/Indicating warning label
Refuerzo de soldadura en el pie / Weld reinforcement on the foot
Slinger en la delantera / DE Slinger
Protector térmico fenólico – Automático / Phenolic thermal protector – automatic
Color Munsell N 1 negro mate / Color Munsell N 1 matte black
Plan de pintura 207N / Painting plan 207N
Forma constructiva F-1/B3R(D) / Mounting F-1/B3R(D)

WEG ELECTRIC CORPORATION - WEC

OV: 21256907

ECM	LOC	SUMMARY OF MODIFICATIONS	EXECUTED	CHECKED	RELEASED	DATE	VER
500001801243		UPDATE IP RATING ACCORDING 417390210	EJESUS	HERNANDEZA	HERNANDEZA	07.08.2020	04
500001778520		UPDATE LENGTH ACC. CLAIM 417351958	EJESUS	ISAAVEDRA	ISAAVEDRA	18.06.2020	03

EXECUTED	PNAVA	SINGLE PHASE MOTOR CLOSED ROLLED STEEL FRAME W56 IP55 TEAO	10007510803
CHECKED	MORALESR		000 / 04
RELEASED	MORALESR		
REL DT	25.03.2020	WMX Huehuetoca Product Engineering	SHEET 1 / 1

0.5 HP 04 Poles 60Hz 417254845

A

UNCONTROLLED COPY

RELEASED

ZME A3

WEG's property. Forbidden reproduction without previous authorization.