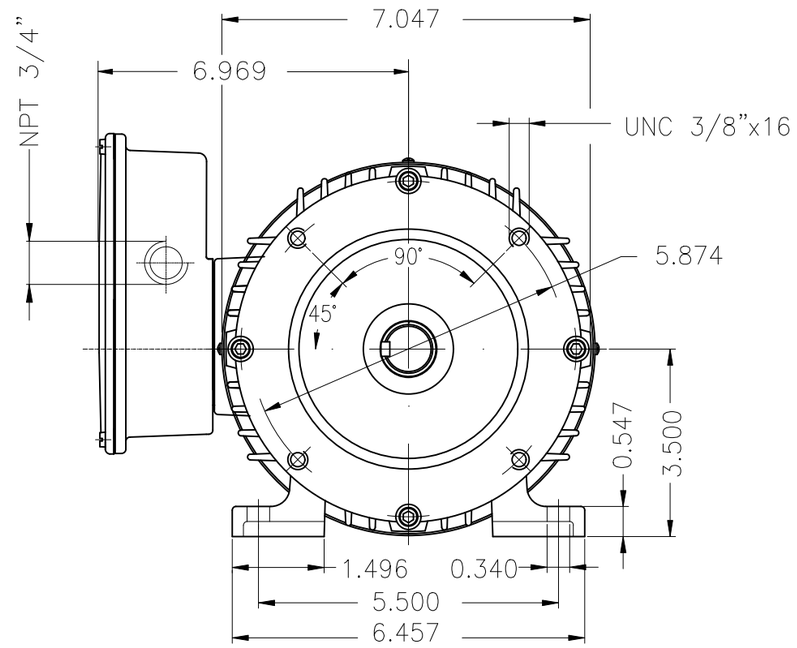

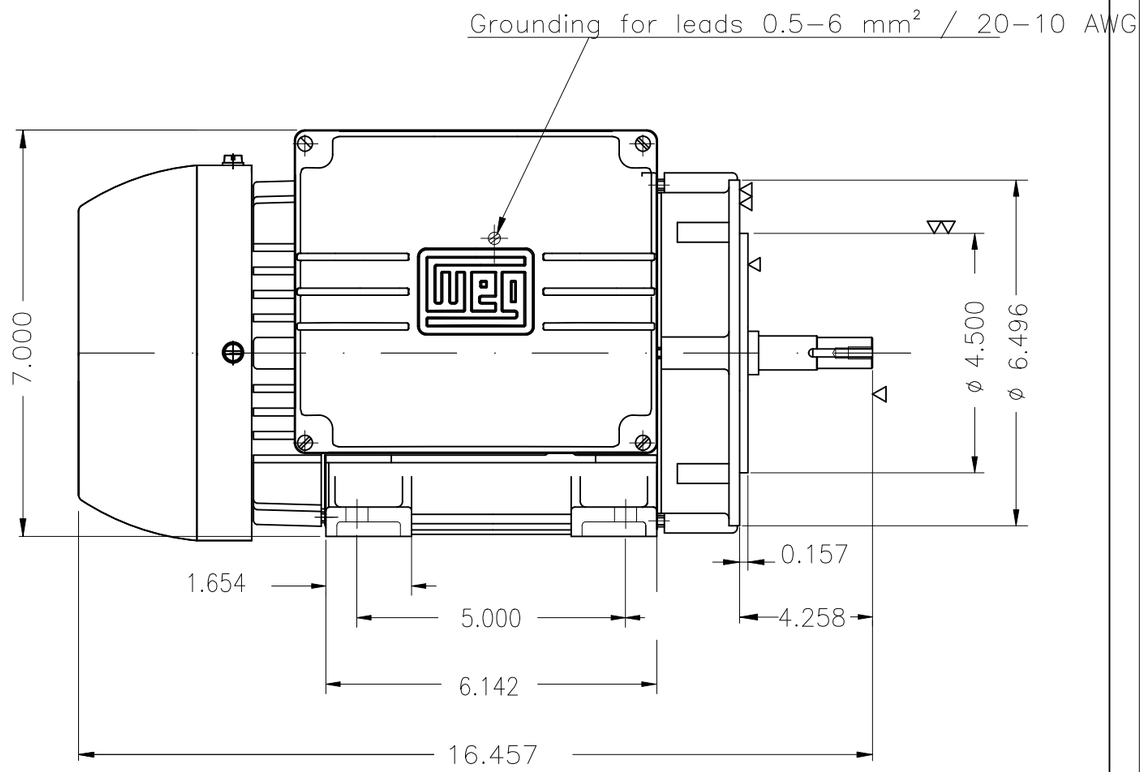

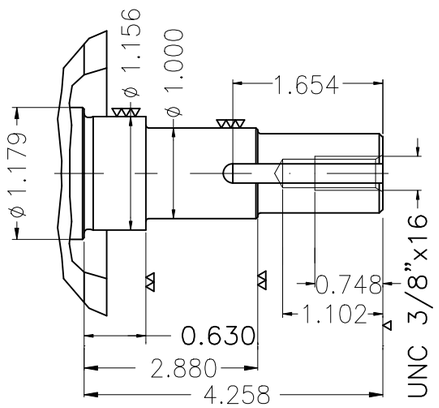

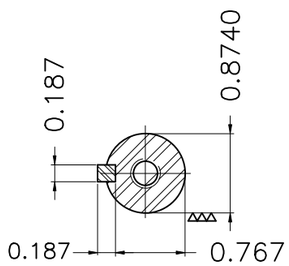

Mounting B34R(D)

ECM	LOC	SUMMARY OF MODIFICATIONS	EXECUTED	CHECKED	RELEASED	DATE	VER
			HYBRISUSER				00

EXECUTED	HYBRISUSER	SINGLE PH. MOTOR JM/JP/JET PUMP	PREVIEW
CHECKED		FRAME 145JM IP55 TEFC	WDD 00
RELEASED			
REL. DATE		WMO Jaragua do Sul Product Engineering	SHEET 1 / 1

3 HP 02 Poles 60 Hz

A

Dimensions in inches

XME A3

WEG's property. Forbidden reproduction without previous authorization.