No reproduction of this drawing is allowed written permission of WEG Motores

EIXO		
PADRÃO	X	Dimensões em polegadas
OPCIONAL		Dimensions in inches
ESPECIAL		

THIS IS AN UPDATED REVISION, THE PREVIOUS ONE MUST BE DISREGARDED.

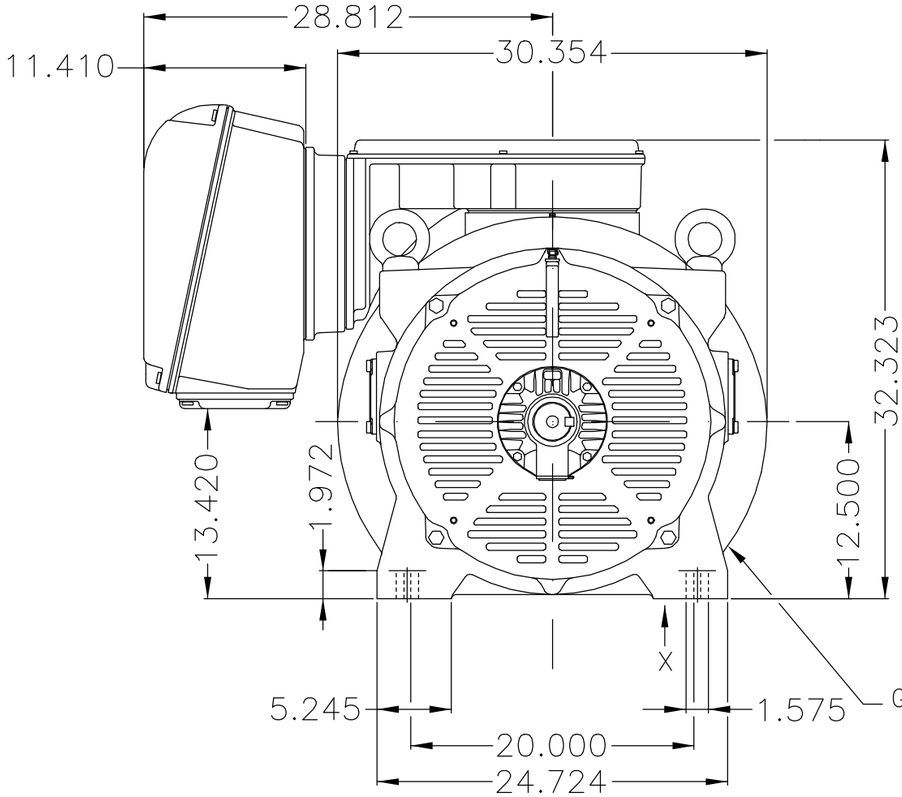

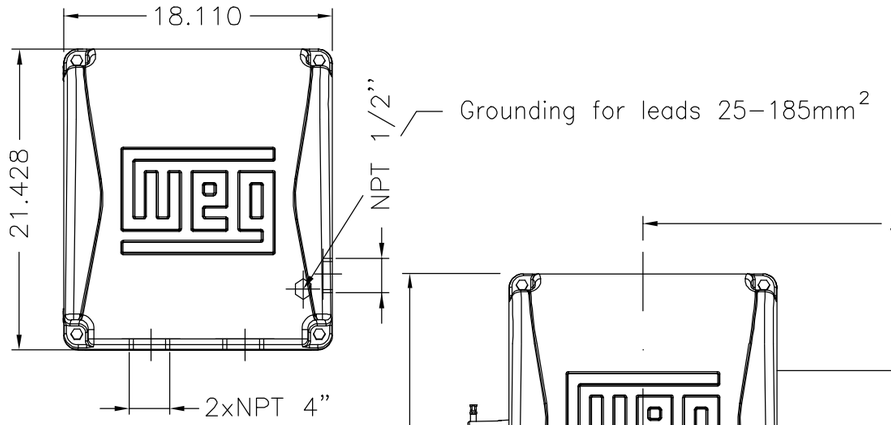

Main terminal box

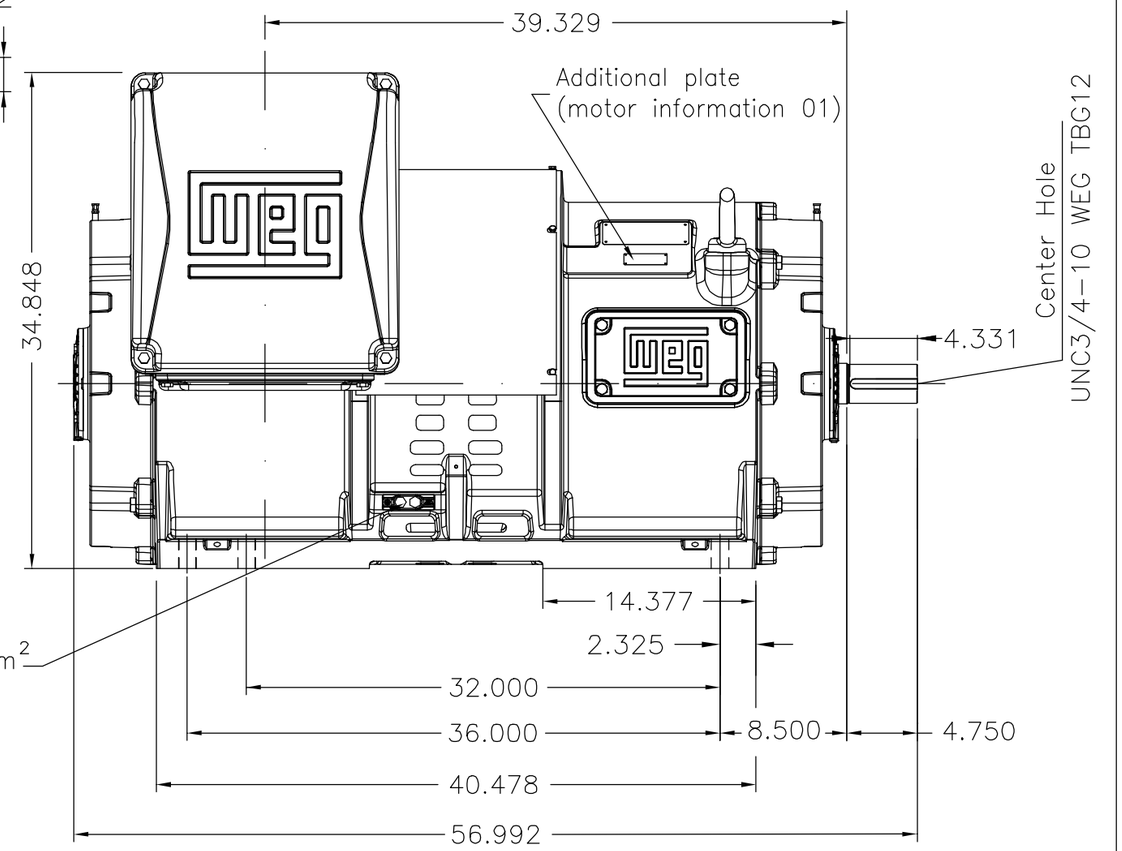

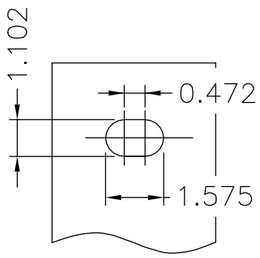

View X
6 holes

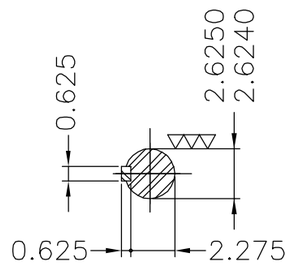

DE Shaft End

Mancal/ Bearing	Quant.graxa(g)/ Quantity grease(g)
Rolamento dianteiro/ DE bearing	10
Rolamento traseiro/ NDE bearing	10

Resistência de aquecimento 110–127 V / 200–240 V / Space heaters 110–127 V / 200–240 V

Intervalo de relubrificação dos rolamentos 1200 horas / Bearings relubrication interval 1200h

Plano de pintura 203A / Painting plan 203A

Forma construtiva B3D / Mounting B3R(D)

WEG ELECTRIC CORP. – MIDDLETOW

ECM	LOC	SUMMARY OF MODIFICATIONS	EXECUTED	CHECKED	RELEASED	DATE	VER
500001549643		ALTERADO CONFORME CLAIM 415219992	RICLAV	DALTONR	DALTONR	06.03.2019	21
500001439714		ALTERADO CONFORME CLAIM 415020118	PKREYSSIG	CLEBERP	CLEBERP	10.04.2018	20

EXECUTED	MATHEUSC	THREE PHASE NEMA P. EFF MOTOR	10001041999
CHECKED	ADRIANAP	FRAME 5010/11TS IP23	000 21
RELEASED	ADRIANAP		
REL DT	23.11.2010	WMO JARAGUÁ DO SUL ENGENHARIA DE PRODUTO	SHEET 1 /

800 HP	02 Poles	60Hz	FD.48355/2011		B
700 HP	02 Poles	60Hz	407052189 ELET/MEC	FD.57611/2010	A

UNCONTROLLED COPY

RELEASED

ZME A3

WEG's property. Forbidden reproduction without previous authorization.