No reproduction of this drawing is allowed written permission of WEG Motores

EIXO	
PADRÃO	
OPCIONAL	
ESPECIAL	X

Dimensões em polegadas
Dimensions in inches

PRELIMINARY DOCUMENT
Not to be used for installation purposes.

THIS IS AN UPDATED REVISION, THE PREVIOUS ONE MUST BE DISREGARDED.

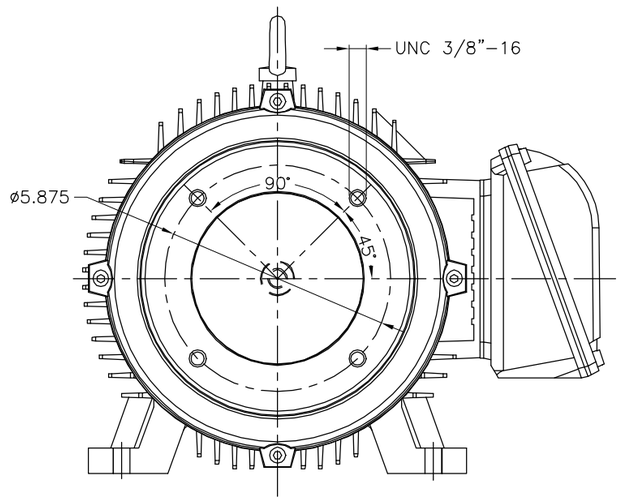

NON DRIVE END

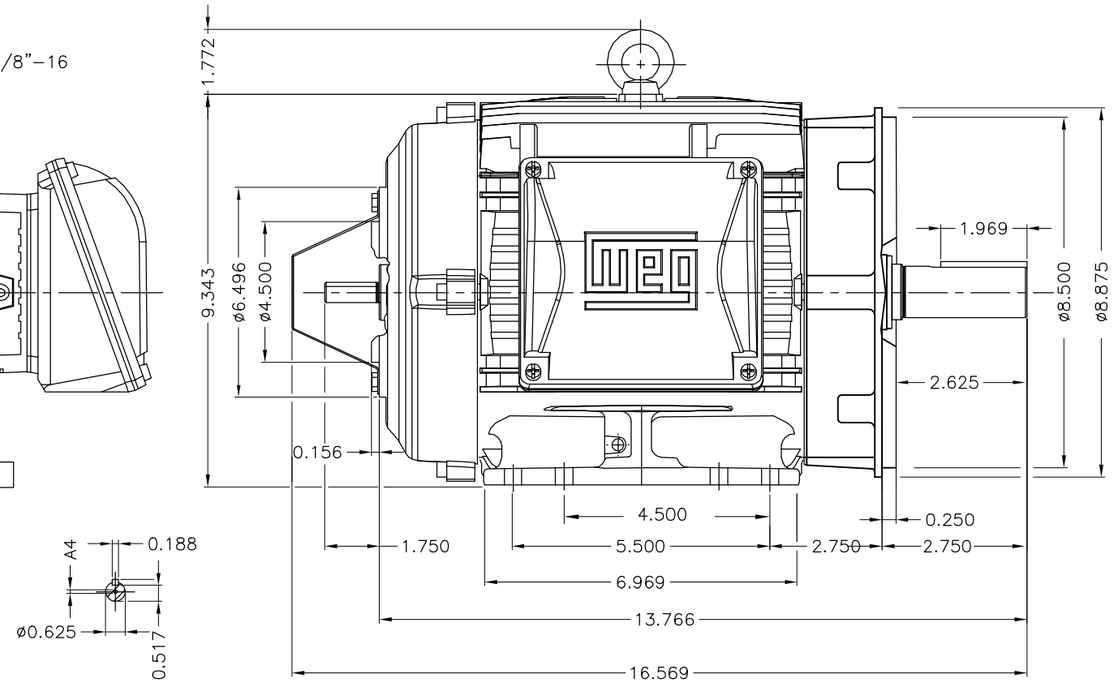

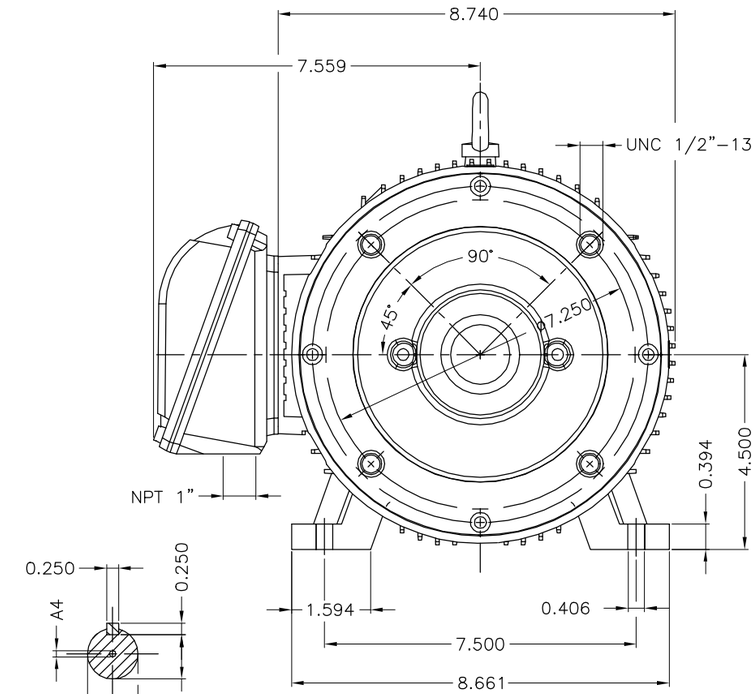

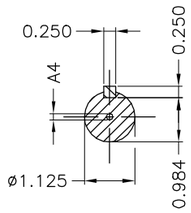

DRIVE END

Placa Tag 01 / Tag Plate

Termostato 155°C – Desconexión / Thermostats 155°C to trip
Sin deflectora / Without fan cover
Rodamiento esferas delantero ZZ–C3 / ZZ–C3 DE ball bearing
Balanceo normal sin chaveta / Standard balancing without key
Motor con paquete central, largo paquete especial Motor with centralized stack, special stack length
Provenido sin chaveta / Supplied without key
Sin ventilador / Without fan
Categoria A / Design A
Plan de pintura 207A / Painting plan 207A
Forma constructiva NEMA F–1 / Mounting NEMA F–1
Forma constructiva B34R(D) / Mounting B34R(D)

WEG ELECTRIC CORPORATION – WEC

ECM	LOC	SUMMARY OF MODIFICATIONS	EXECUTED	CHECKED	RELEASED	DATE	VER
500001952677		CONFORME A CLAIM 418290715	RESTELA	IRVINGI	IRVINGI	22.06.2021	03
500001587875		ACCORGING TO 415383210	PEREZA	MISAEL	MISAEL	23.04.2019	02

OV: 3026082
PC: Vector Duty

1.– SPECIAL THERMAL PROTECTOR:
10018066 BIMETAL THERMAL PROT 155 NF 7AM/CD79

NOTES:

EXECUTED	PNAVA	THREE PHASE W22 MOTOR - NEMA PREMIUM EFF	10002646819
CHECKED	AZUE	FRAME 182/4TCZ IP55	000 / 03
RELEASED	AZUE		
REL DT	03.01.2014	WMX HUEHUETOCA INGENIERA DEL PRODUCTO	SHEET 1 / 1

5 HP 04 Poles 60Hz 413285530

A

UNCONTROLLED COPY

RELEASED

ZME A3

WEG's property. Forbidden reproduction without previous authorization.