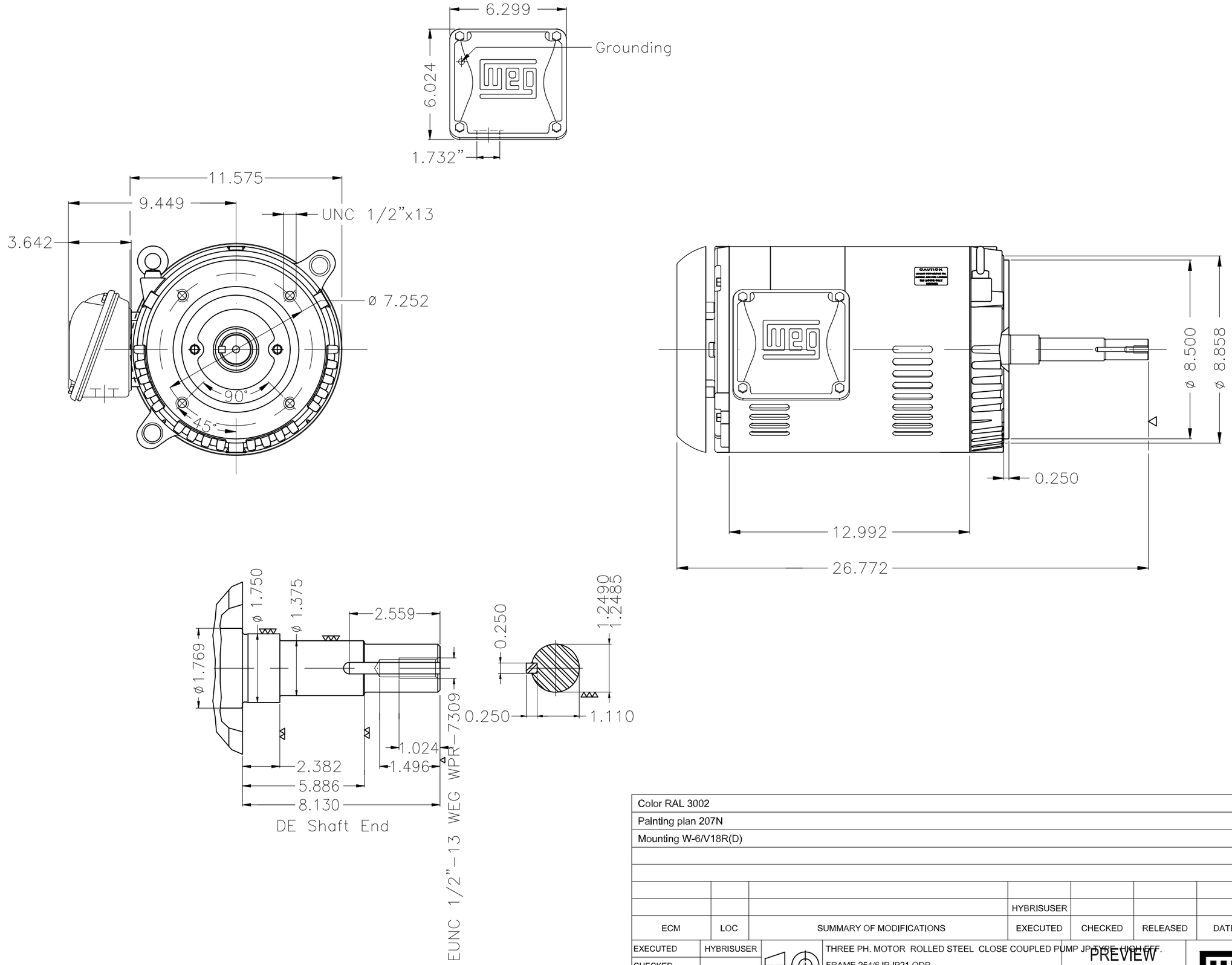

Color RAL 3002

Painting plan 207N

Mounting W-6/V18R(D)

ECM	LOC	SUMMARY OF MODIFICATIONS	EXECUTED	CHECKED	RELEASED	DATE	VER
			HYBRISUSER				00

EXECUTED	HYBRISUSER	THREE PH. MOTOR ROLLED STEEL CLOSE COUPLED PUMP JP TYPE HIGH EFF.
CHECKED		FRAME 254/6JP IP21 ODP
RELEASED		
REL. DATE		WMO Jaragua do Sul Product Engineering

PREVIEW

WDD 00

SHEET 1 / 1

20 HP 02 Poles 60 Hz

A

Dimensions in inches

XME A3

WEG's property. Forbidden reproduction without previous authorization.