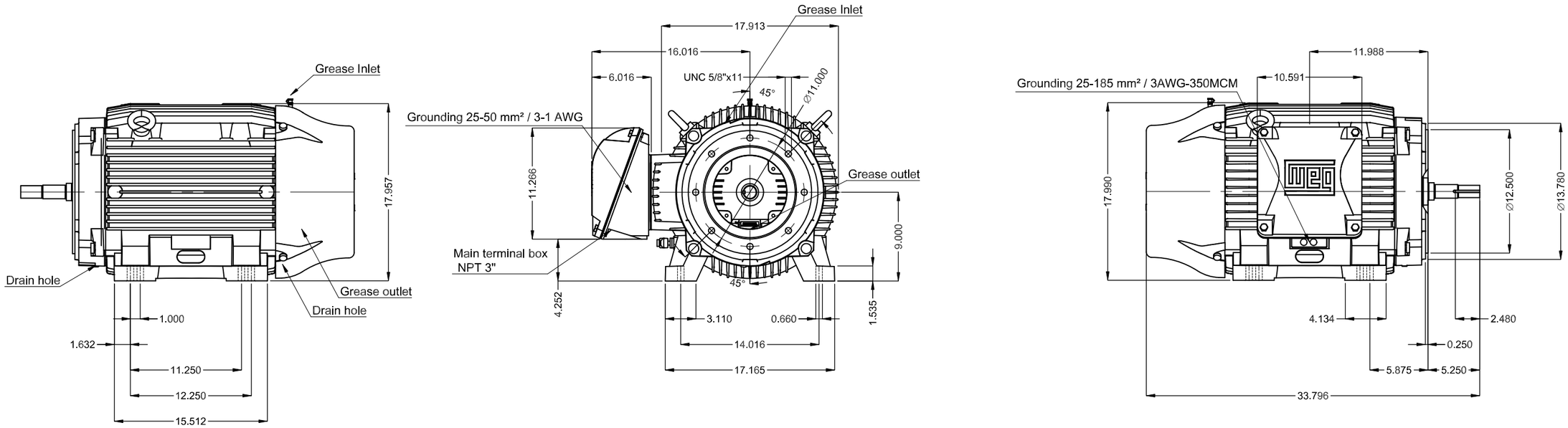

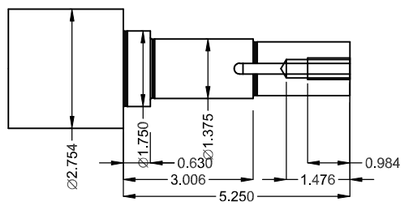

DE Shaft End

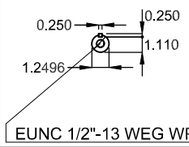

EUNC 1/2"-13 WEG WPR-7309

Without vertical jackscrews
Color RAL 5009
Painting plan 203A
Mounting B34R(D)

60 HP 02 Poles 60 Hz | A

ECM	LOC	SUMMARY OF MODIFICATIONS	EXECUTED	CHECKED	RELEASED	DATE	VER
			HYBRISUSER				00

EXECUTED	HYBRISUSER	THREE PH. MOTOR JM/JP/JET PUMP W22 HIGH EFF.
CHECKED		FRAME 364/5JM IP55 TEFC
RELEASED		
REL. DATE		

PREVIEW
WDD 00
SHEET /

Dimensions in inches

A3

WEG's property. Forbidden reproduction without previous authorization.