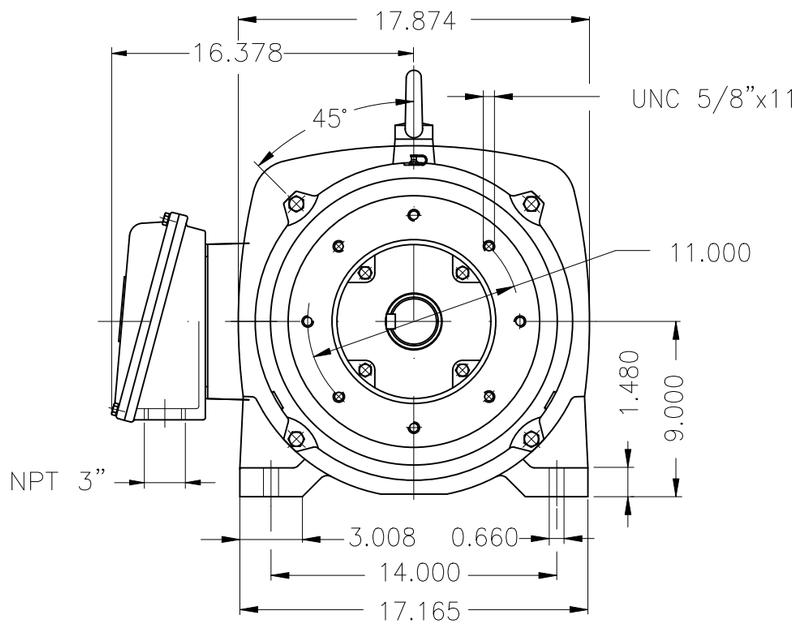

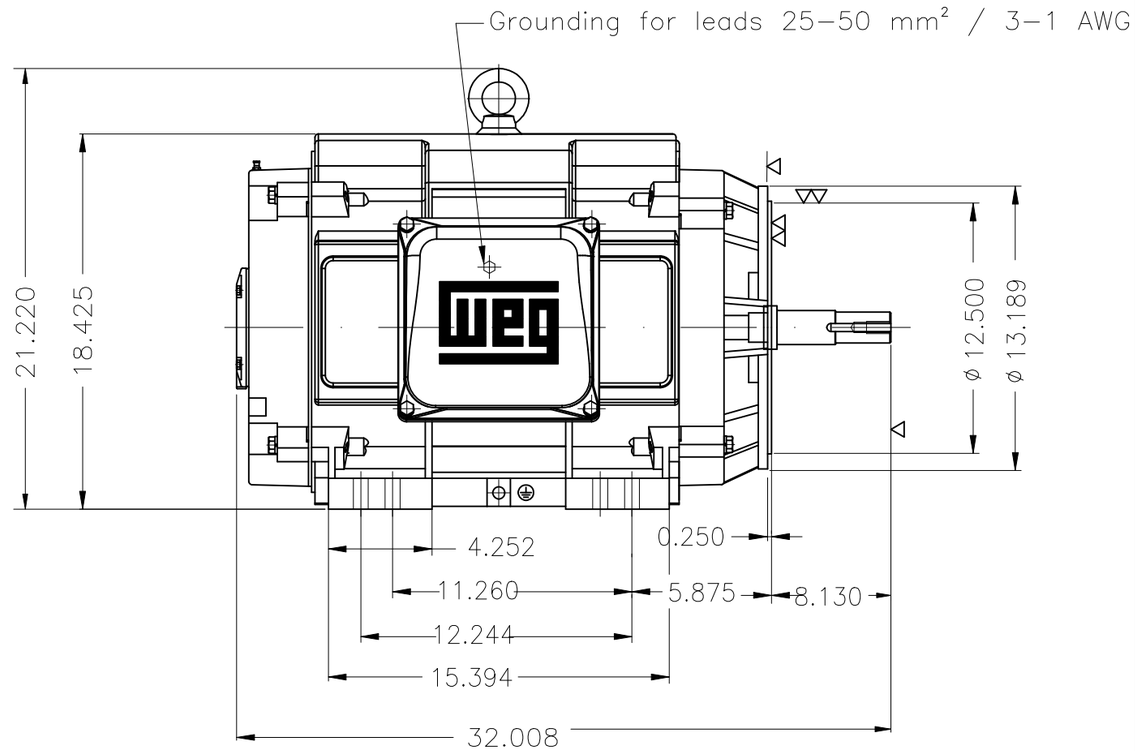

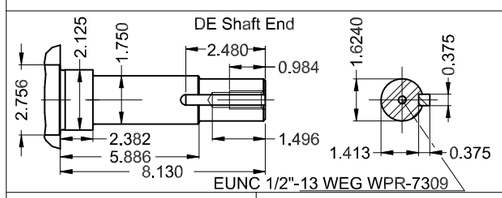

60 HP 04 Poles 60 Hz | A

ECM	LOC	SUMMARY OF MODIFICATIONS	EXECUTED	CHECKED	RELEASED	DATE	VER
			HYBRISUSER				00

Certification UL/FIRE PUMP
Color RAL 5009
Painting plan 203A
Mounting B34R(D)

EXECUTED	HYBRISUSER	THREE PH. MOTOR JM/JP/JET PUMP HIGH EFF.
CHECKED		FRAME 364/5JP IP23 ODP
RELEASED		
REL. DATE		WMO Jaragua do Sul Product Engineering

PREVIEW
WDD 00
SHEET 1 / 1

Dimensions in inches
XME A3

WEG's property. Forbidden reproduction without previous authorization.