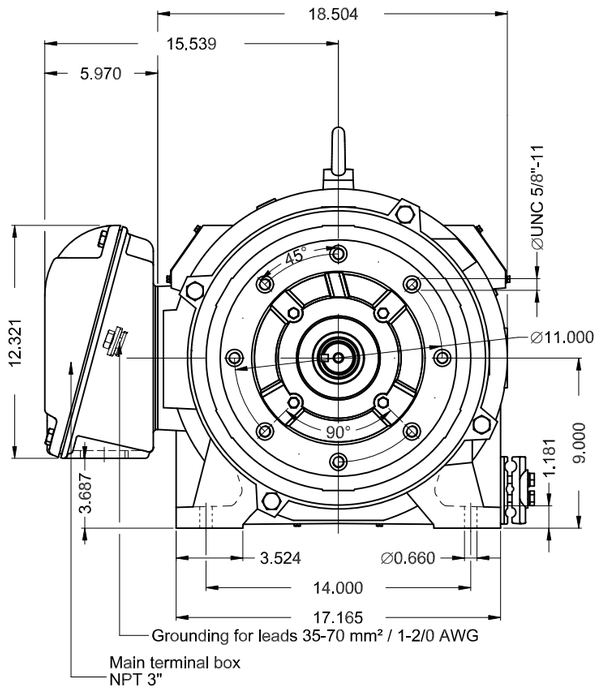

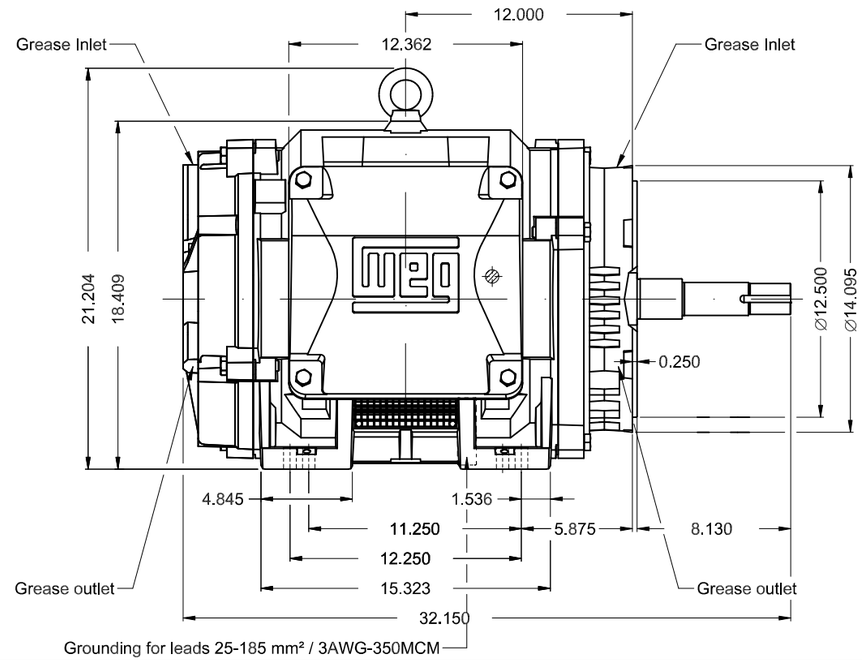

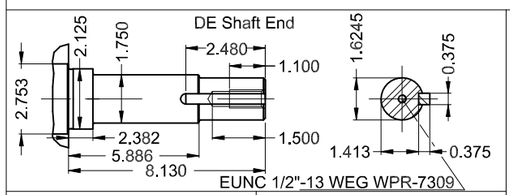

75 HP 02 Poles 60 Hz | A

1:8

ECM	LOC	SUMMARY OF MODIFICATIONS	EXECUTED	CHECKED	RELEASED	DATE	VER
			HYBRISUSER				00

Color RAL 5009
Painting plan 203A
Mounting NEMA F-1
Mounting B34R(D)

EXECUTED	HYBRISUSER
CHECKED	
RELEASED	
REL. DATE	

THREE PH. MOTOR W40 CLOSE COUPLED PUMP JP TYPE NEMA PREM. EFF
FRAME 364/5JP IP23 ODP

PREVIEW

WDD 00

WMO Jaragua do Sul Product Engineering SHEET 1 / 1

Dimensions in inches

XME A3

WEG's property. Forbidden reproduction without previous authorization.