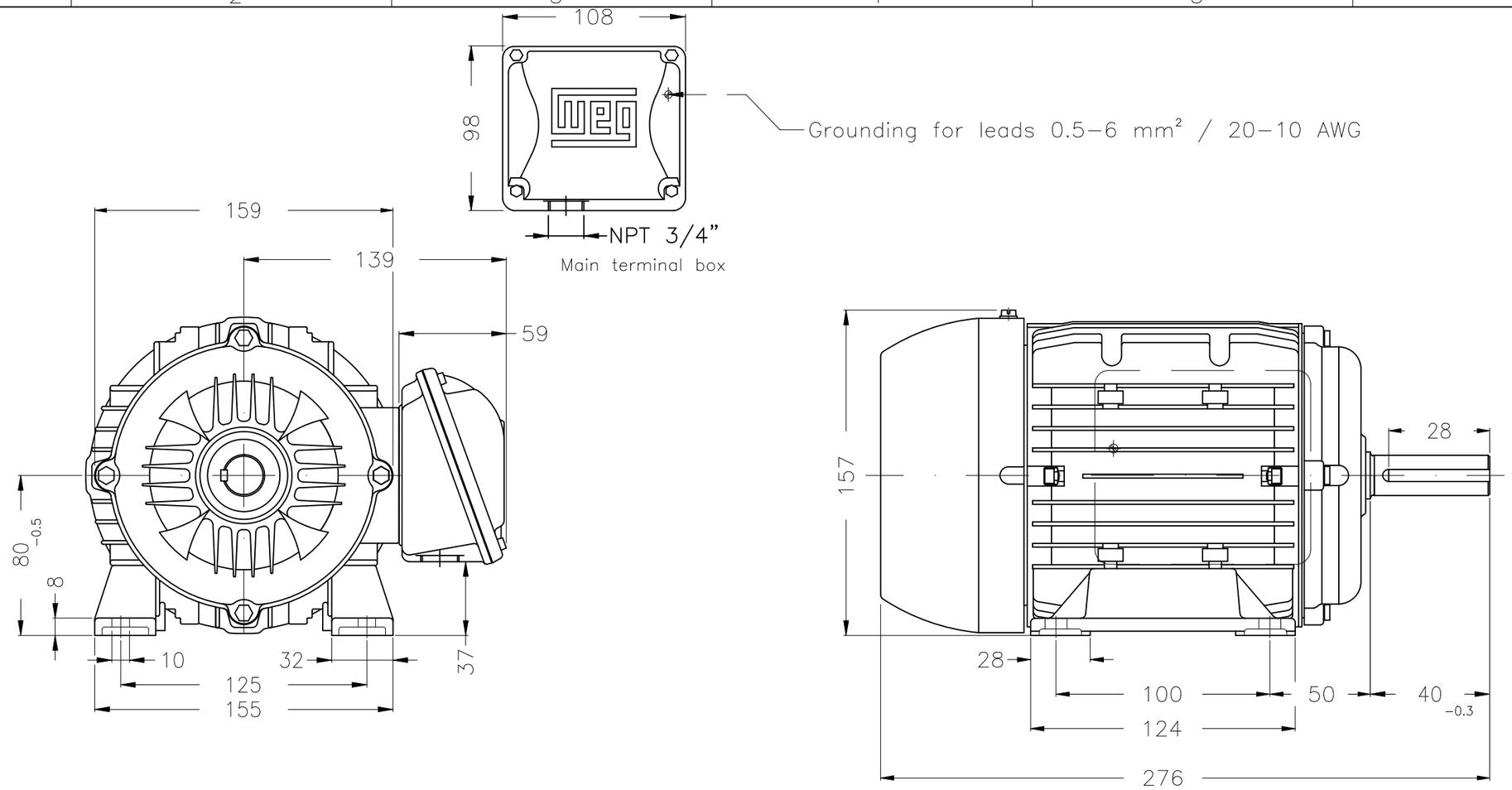

0.33 HP 08 Poles 60 Hz | A

ECM	LOC	SUMMARY OF MODIFICATIONS	EXECUTED	CHECKED	RELEASED	DATE	VER
			HYBRISUSER				00

DE Shaft End

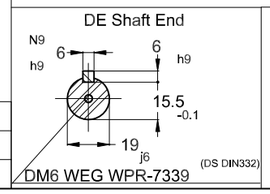

DM6 WEG WPR-7339

Color RAL 7022

Painting plan 207N

Mounting B3L(E)

EXECUTED	HYBRISUSER	THREE PH. MOTOR MULTIMOUNTIN HIGH EFF.	PREVIEW
CHECKED		FRAME 80 IP55 TEFC	WDD 00
RELEASED			
REL. DATE		WMO Jaragua do Sul Product Engineering	SHEET 1 / 1

Dimensions in mm

XME A3

WEG's property. Forbidden reproduction without previous authorization.