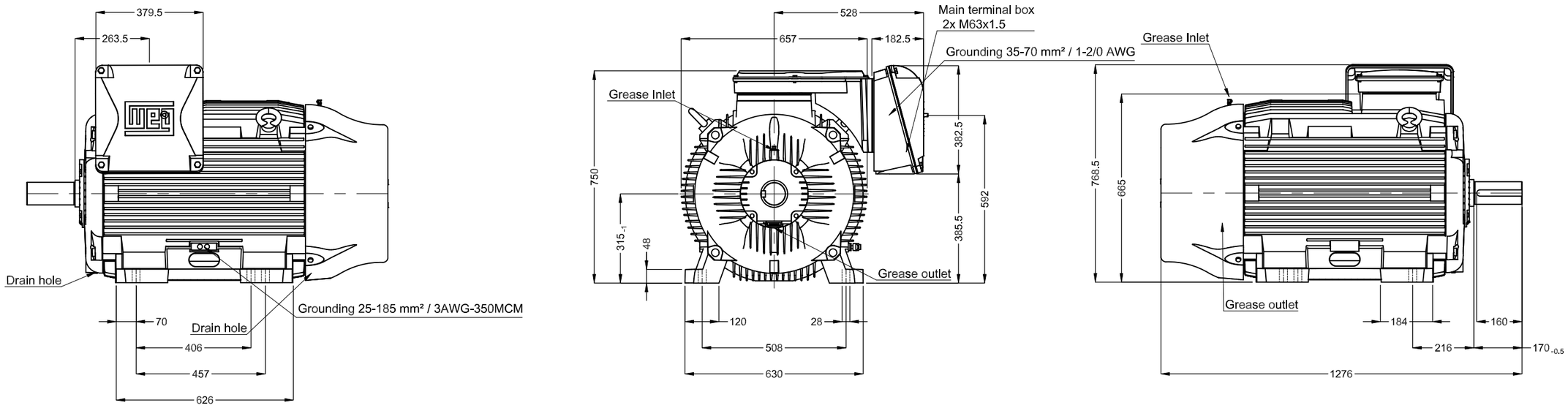

Continuous resin flow impregnation
Without alarm thermal protection
Without overload protector at bearing
Without switch off thermal protection
Class F insulation - 80K temperature rise
Rotation CW and CCW
NDE endshield with electrically insulated bearing hub
Color RAL 5009
Painting plan 203A
Service factor 1.25
Mounting B3L(E)

DE Shaft End

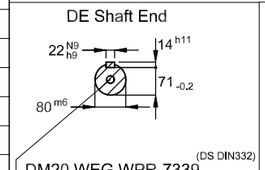

DM20 WEG WPR-7339

150 HP 04 Poles 60 Hz | A

ECM	LOC	SUMMARY OF MODIFICATIONS	EXECUTED	CHECKED	RELEASED	DATE	VER
			HYBRISUSER				00

EXECUTED	HYBRISUSER
CHECKED	
RELEASED	
REL. DATE	

THREE PH. MOTOR W22 IE4
FRAME 315S/M IP55 TEFC

PREVIEW
WDD 00
SHEET /

Dimensions in mm

A3

WEG's property. Forbidden reproduction without previous authorization.