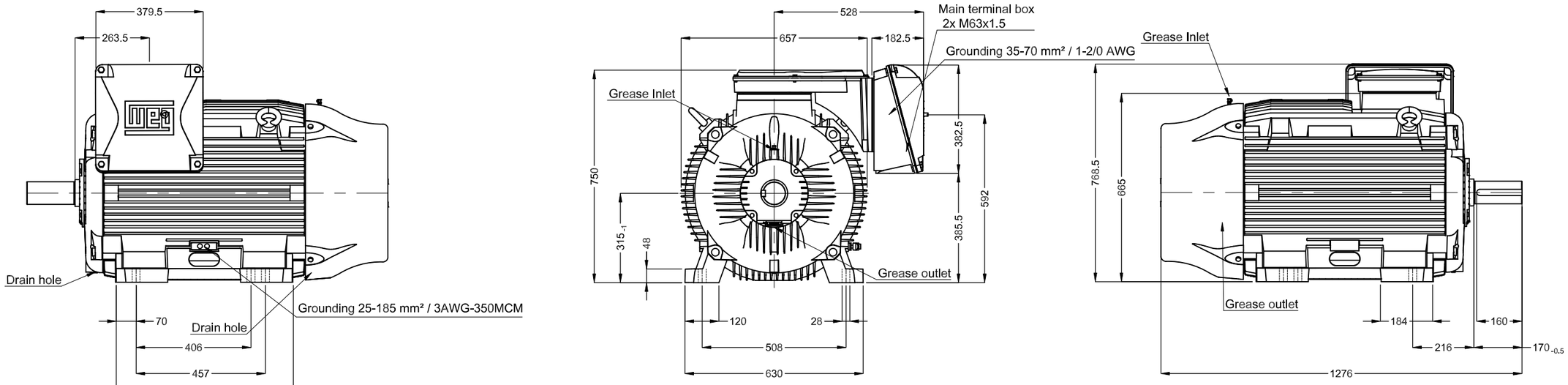

Without vertical jackscrews

NDE endshield with electrically insulated bearing hub

Color RAL 5009

Painting plan 203A

Mounting B3L(E)

DE Shaft End

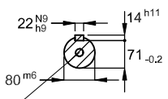

(DS DIN332)

DM20 WEG WPR-7339

150 HP 06 Poles 60 Hz | A

ECM	LOC	SUMMARY OF MODIFICATIONS	EXECUTED	CHECKED	RELEASED	DATE	VER
			HYBRISUSER				00

EXECUTED	HYBRISUSER
CHECKED	
RELEASED	
REL. DATE	

THREE PH. MOTOR W22 IE3

FRAME 315S/M IP55 TEFC

PREVIEW

WDD 00

SHEET /

Dimensions in mm

A3

WEG's property. Forbidden reproduction without previous authorization.