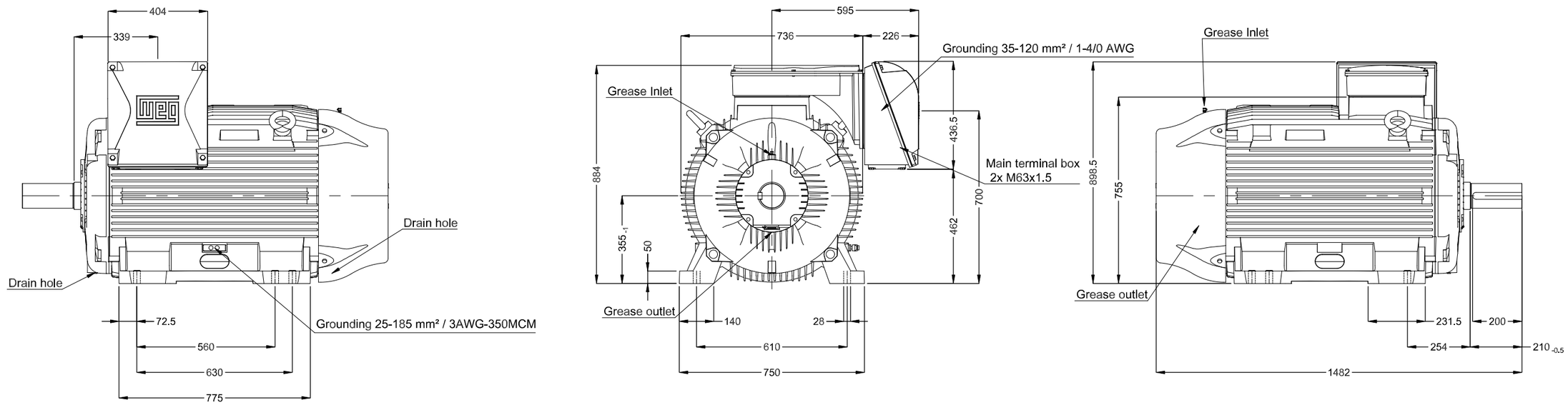

Continuous resin flow impregnation
Without alarm thermal protection
Without overload protector at bearing
Without switch off thermal protection
Class F insulation - 80K temperature rise
Rotation CW and CCW
NDE endshield with electrically insulated bearing hub
Color RAL 5009
Painting plan 203A
Mounting B3L(E)

DE Shaft End

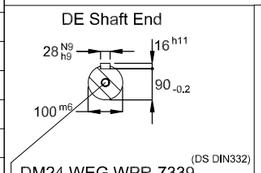

DM24 WEG WPR-7339

250 HP 06 Poles 60 Hz | A

ECM	LOC	SUMMARY OF MODIFICATIONS	EXECUTED	CHECKED	RELEASED	DATE	VER
			HYBRISUSER				00

EXECUTED	HYBRISUSER
CHECKED	
RELEASED	
REL. DATE	

THREE PH. MOTOR W22 IE4
FRAME 355M/L IP55 TEFC

PREVIEW
WDD 00
SHEET /

Dimensions in mm

A3

WEG's property. Forbidden reproduction without previous authorization.