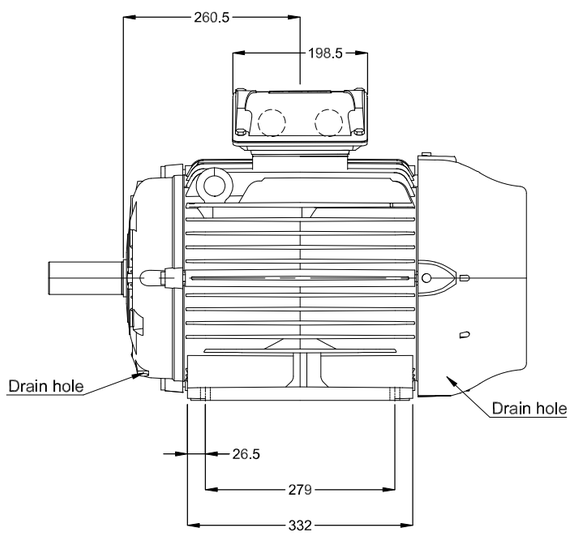

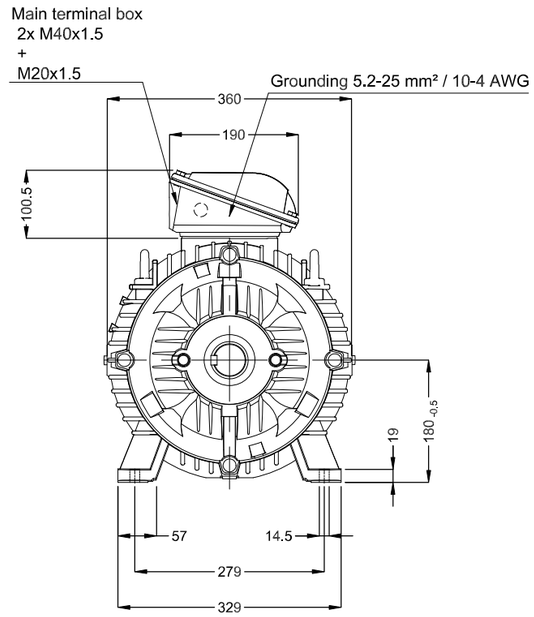

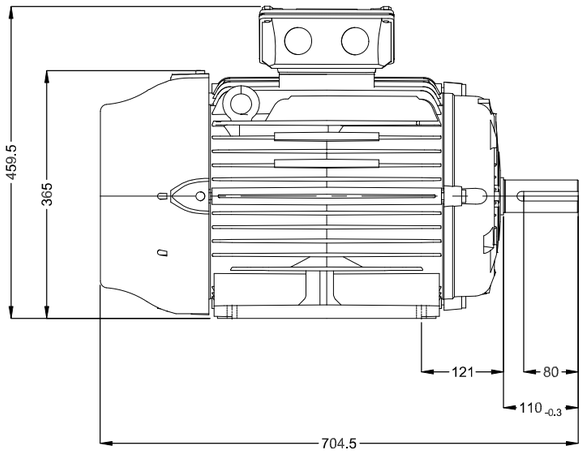

Without vertical jackscrews

Color RAL 5009

Painting plan 203A

Mounting B3T

DE Shaft End

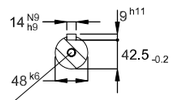

(DS DIN332)

DM16 WEG WPR-7339

22 kW 04 Poles 50 Hz | A

ECM	LOC	SUMMARY OF MODIFICATIONS	EXECUTED	CHECKED	RELEASED	DATE	VER
			HYBRISUSER				00

EXECUTED	HYBRISUSER	THREE PH. MOTOR W22 IE2
CHECKED		FRAME 180L IP55 TEFC
RELEASED		
REL. DATE		

PREVIEW

WDD 00

SHEET /

Dimensions in mm

A3

WEG's property. Forbidden reproduction without previous authorization.