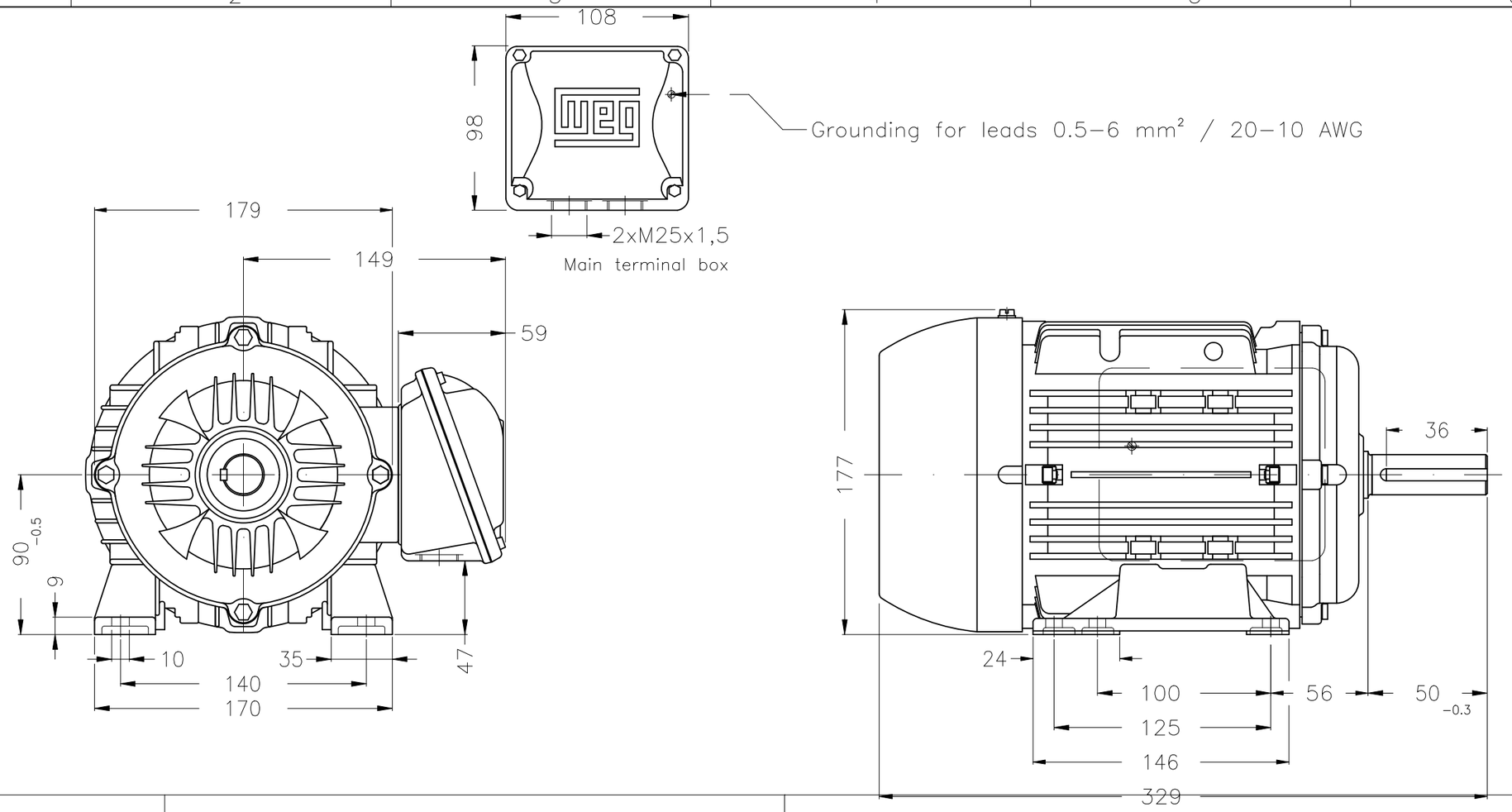

Connection cables connected in the high voltage

Color RAL 5009

Painting plan 207N

Mounting B3L(E)

DE Shaft End

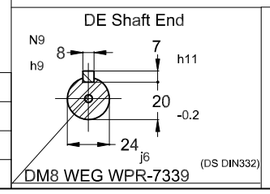

DM8 WEG WPR-7339

2 HP 04 Poles 60 Hz | A

ECM	LOC	SUMMARY OF MODIFICATIONS	EXECUTED	CHECKED	RELEASED	DATE	VER
			HYBRISUSER				00

EXECUTED	HYBRISUSER	THREE PH. MOTOR MULTIMOUNTIN IE3	PREVIEW
CHECKED		FRAME 90S/L IP55 TEFC	WDD 00
RELEASED			
REL. DATE		WMO Jaragua do Sul Product Engineering	SHEET 1 / 1

Dimensions in mm

XME A3

WEG's property. Forbidden reproduction without previous authorization.