EIXO/SHAFT		Dimensões em polegadas Dimensions in inches
PADRÃO/STANDARD		
OPCIONAL/OPTIONAL		
ESPECIAL/SPECIAL	X	

CERTIFIED
WEG MOTORES
Certified document.
Not subject to changes.

THIS IS AN UPDATED REVISION, THE PREVIOUS ONE MUST BE DISREGARDED.

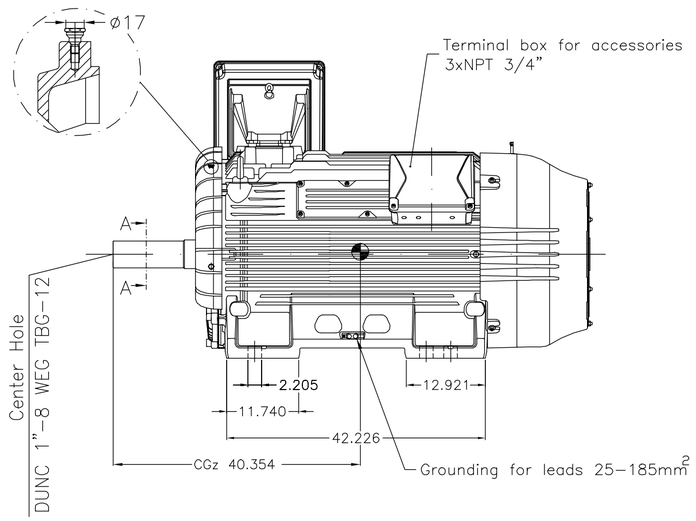

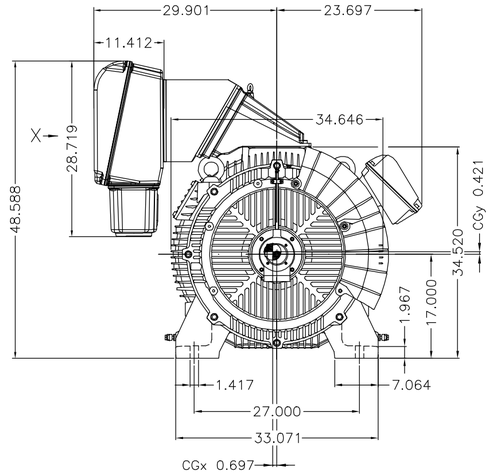

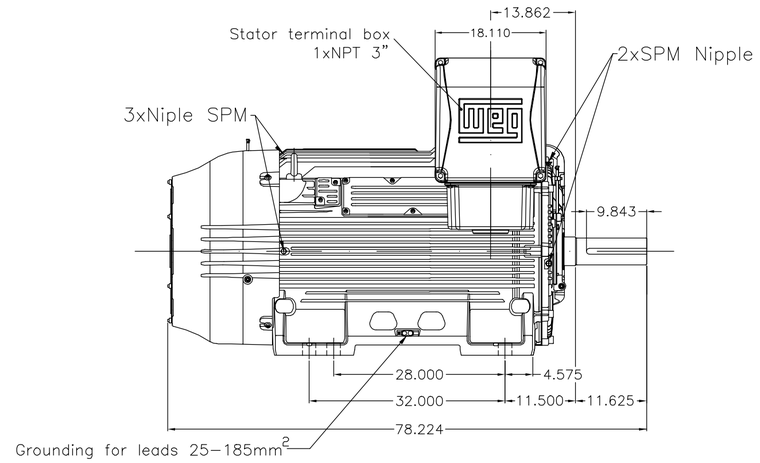

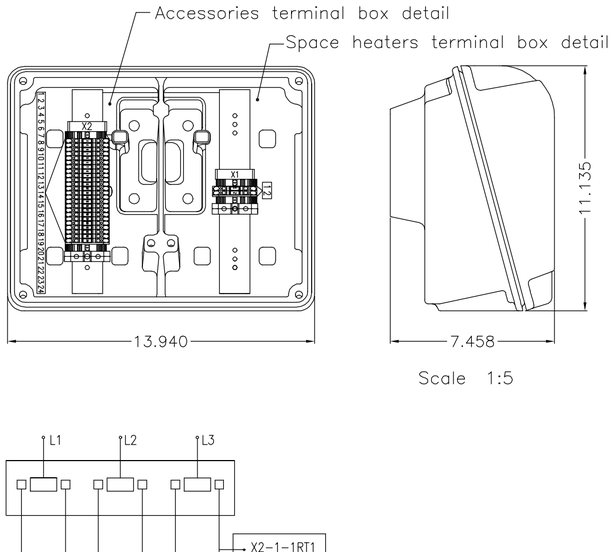

Scale 1:5

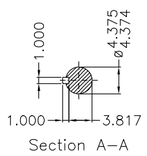

Section A–A

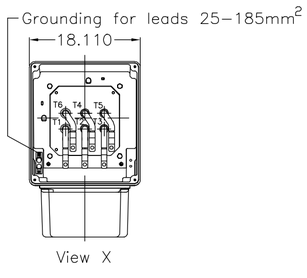

View X

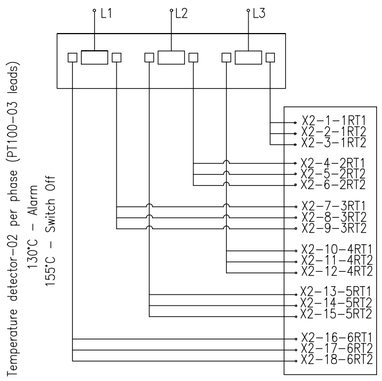

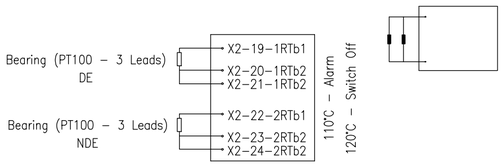

Space heaters connection diagram

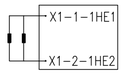

110 - 127 V
146 - 194 W

Ventilador em ferro fundido com pintura epoxi / Cast iron fan with epoxy painting
Ilhó especial na passagem dos cabos / Special rubber ring at the leads exit on frame
Cabos de ligação com terminal especial / Connection leads with special terminals
Suporte especial para a caixa de ligação / Special support for terminal box
Vedação INPRO/SEAL no mancal dianteiro e traseiro / INPRO/SEAL at DE and NDE
Vibração conforme IEEE841 / Vibration acording to IEEE841
Motor com características IEEE841 / Motor with IEEE841 characteristics
Tampa defletora especial / Special fan cover
Saída de graxa conforme IEEE841 / Grease outlet acording to IEEE841
Pintura interna tropicalizada conforme IEEE841 / Internal tropicalized painting acording to IEEE841
Chaveta B / B key
Cor RAL 5009 / Color RAL 5009
Terminal de aterramento adicional na carcaça (simetricamente oposto) em bronze / Additional brass grounding connector on frame (symmetrically opposite)
Sem placa de bornes / Without terminal block
Dreno roscado em aço inoxidável / Stainless steel Threaded drain
Balanceamento especial 1/2 chaveta / Special balancing with half key
Carcaça com furação para pino guia nos quatro pés / Frame with drilled feet for dowel pin
Apto a sensor de vibração SPM / SPM studs
Planicidade especial dos pés conforme IEEE841/API 541 / Special foot flatness according IEEE841/API 541
Graxeira prolongada em aço inoxidável / Fitting extended stainless steel
Plano de pintura 214P / Painting plan 214P
Forma construtiva B3D / Mounting F-1/B3R(D)

WEG ELECTRIC CORPORATION – WEC

						SCALE	1:18	
500001621005	E2	Space heaters conection	ELTONS	SAORIN	SAORIN	09.07.2019	06
500001281039		ALT. P/ CAIXA FERRO 02 - CLAIM 414580853	RBOECK	FRANCINES	FRANCINES	01.03.2017	05
ECM	LOC	SUMMARY OF MODIFICATIONS	EXECUTED	CHECKED	RELEASED	DATE	VER

EXECUTED	MAIKONP	MOTOR TRIFÁSICO W50	10003408458
CHECKED	CRISLAINEN	FRAME 6806/07 IP55	000 06
RELEASED	CRISLAINEN		
REL DT	05.03.2015	WMO JARAGUA DO SUL ENGENHARIA DE PRODUTO	SHEET 1 / 1

700 HP 04 Poles 60Hz 2300/4160V 413759141 ELET/MEC A

UNCONTROLLED COPY

RELEASED

ZME A2

WEG's property. Forbidden reproduction without previous authorization.