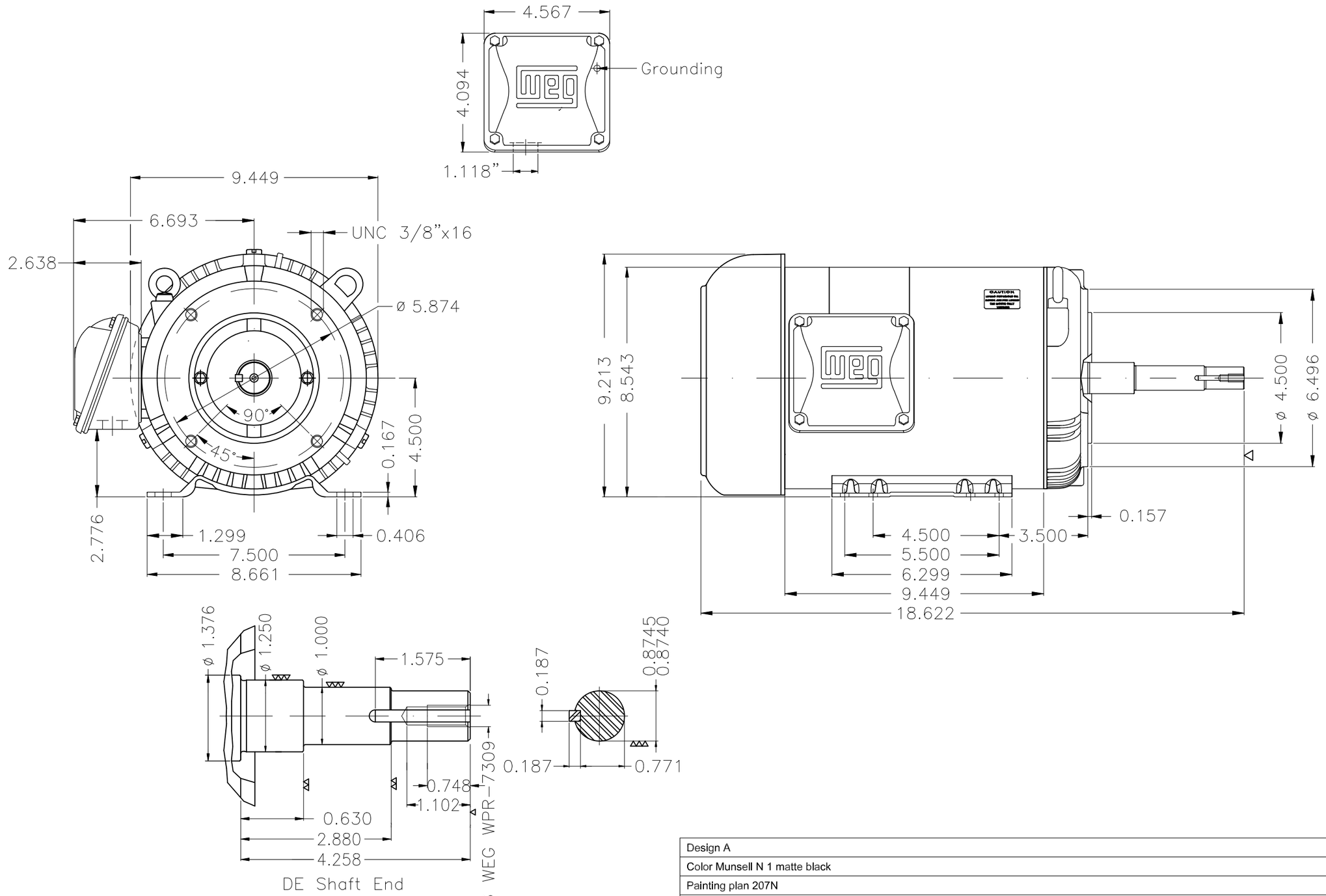


| | | | | | | | |
|---|---|---|---|---|---|---|---|
| Design A | | | | | | | |
| Color Munsell N 1 matte black | | | | | | | |
| Painting plan 207N | | | | | | | |
| Mounting F-1/B34R(D) | | | | | | | |
| | | | | | | | |
| | | | | | | | |
| | | | HYBRISUSER | | | | 00 |
| ECM | LOC | SUMMARY OF MODIFICATIONS | EXECUTED | CHECKED | RELEASED | DATE | VER |

| | | | |
|---|---|---|---|
| EXECUTED | HYBRISUSER | THREE PH. MOTOR ROLLED STEEL CLOSE COUPLED PUMP JM TYPE HIGH EFF. | PREVIEW |
| CHECKED | | FRAME 182/4JM IP55 TEFC | WDD 00 |
| RELEASED | | | |
| REL. DATE | | WMO Jaragua do Sul Product Engineering | SHEET 1 / 1 |

7.5 HP 02 Poles 60 Hz

A

Dimensions in inches

XME A3

WEG's property. Forbidden reproduction without previous authorization.