EIXO/SHAFT		
PADRÃO/STANDARD	X	Dimensões em polegadas
OPCIONAL/OPTIONAL		Dimensions in inches
ESPECIAL/SPECIAL		

CERTIFIED
WEG MOTORES
Certified document.
Not subject to changes.

THIS IS AN UPDATED REVISION, THE PREVIOUS ONE MUST BE DISREGARDED.

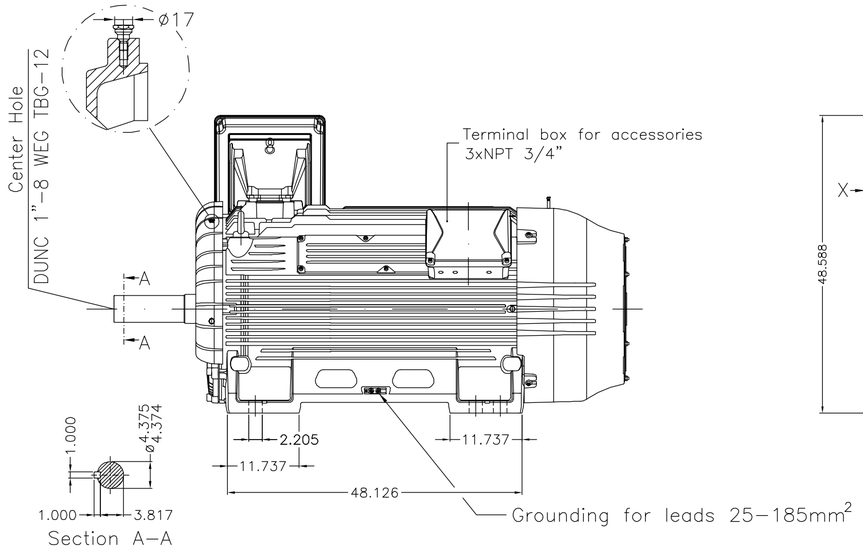

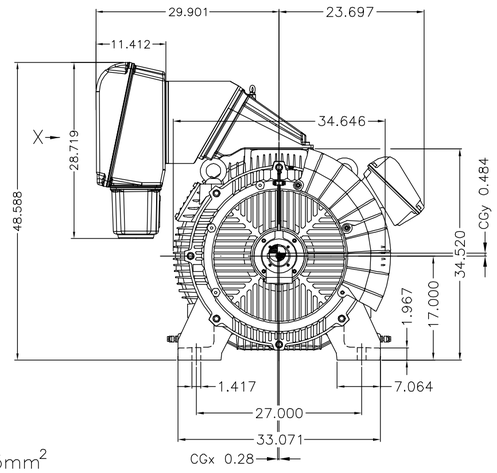

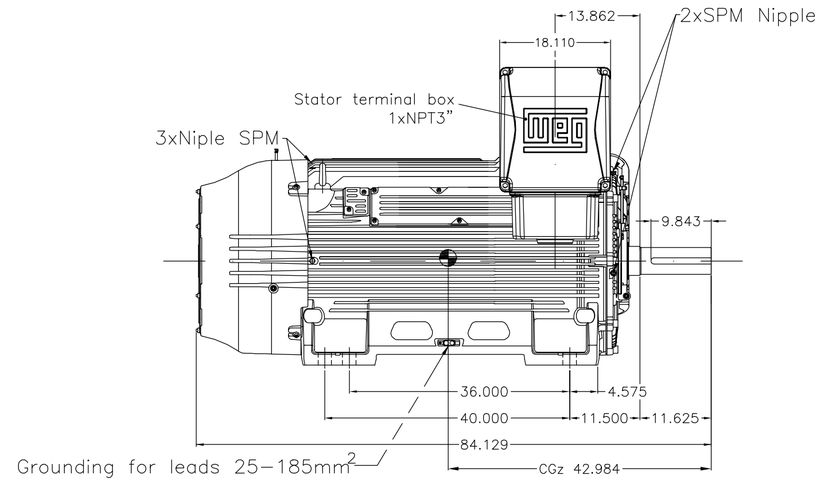

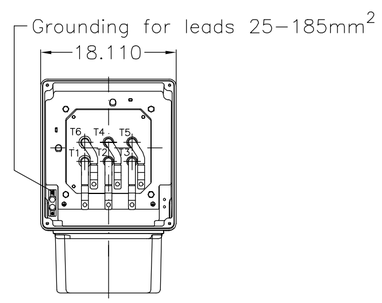

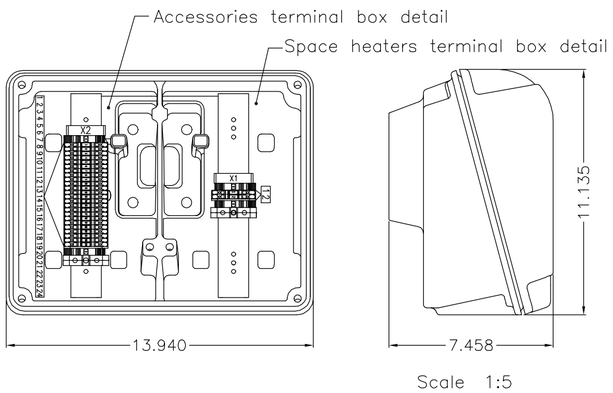

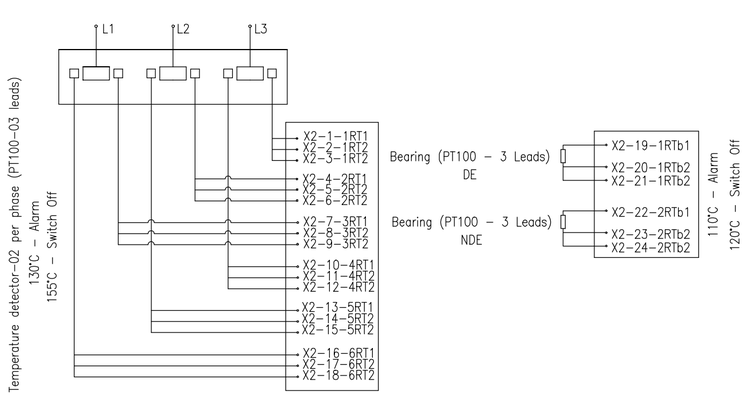

Space heaters connection diagram

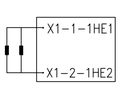

110 – 127 V
146 – 194 W

Pintura interna tropicalizada conforme IEEE841 / Tropicalized internal painting according to IEEE841
Apto a sensor de vibração SPM / SPM studs
Terminal de aterramento adicional na carcaça (simetricamente oposto) em bronze Additional bronze grounding lug on frame (symmetrically opposite)
Dreno roscado automático tipo "T" em aço inoxidável Stainless steel automatic threaded drain "T" type
Planicidade especial dos pés conforme IEEE841/API 541 Special feet flatness according to IEEE841/API 541
Terminal com furo de diâmetro 13 mm para pino de ligação Terminal with 13 mm diameter hole for connection bolt
Ventilador externo em ferro fundido com pintura epoxi / Cast iron external fan with epoxy coating
Ilhó especial na passagem dos cabos para a carcaça Special rubber grommet at the cables entry on frame
Tampa defletora especial / Special fan cover
Graxeira prolongada em aço inoxidável / Stainless steel extended grease fitting
Saída de graxa conforme IEEE841 / Grease outlet according to IEEE841
Rotor com barras de cobre / Rotor with copper bars
Grau de vibração B / Vibration grade B
Sem placa de bornes / Without terminal block
Vibração conforme IEEE841 / Vibration according to IEEE841
Suporte especial para a caixa de ligação / Special support for terminal box
Balanceamento especial 1/2 chaveta / Special balancing with half key
Motor com características IEEE841 / Motor with IEEE841 features
Chaveta B / B key
Vedação INPRO/SEAL no mancal dianteiro e traseiro / INPRO/SEAL at DE and NDE
Carcaça com furação para pino guia nos quatro pés / Frame with holes for dowel pins on the four feet
Cor RAL 5009 / Color RAL 5009
Plano de pintura 214P / Painting plan 214P
Forma construtiva B3D / Mounting B3R(D)

WEG ELECTRIC CORPORATION - WEC

ECM	LOC	SUMMARY OF MODIFICATIONS	EXECUTED	CHECKED	RELEASED (SCALE)	DATE (%)	VER
500002383596		100000181978	FRANCINES	CLEBERP	CLEBERP	24.05.2023	07
500001864901		ALT. CONF. ECM:500001864901	DWAGNER	ELTONS	ELTONS	15.12.2020	06

EXECUTED	MAIKONP	MOTOR TRIFÁSICO W50	10003408652
CHECKED	CRISLAINEN	FRAME 6808/09 IP55	000 07
RELEASED	CRISLAINEN		
REL DT	05.03.2015	WMO JARAGUA DO SUL ENGENHARIA DE PRODUTO	SHEET 1 / 1

700 HP 06 Poles 60Hz 2300/4160V 413759142 MEC/ELET A

UNCONTROLLED COPY

RELEASED

ZME A2

WEG's property. Forbidden reproduction without previous authorization.