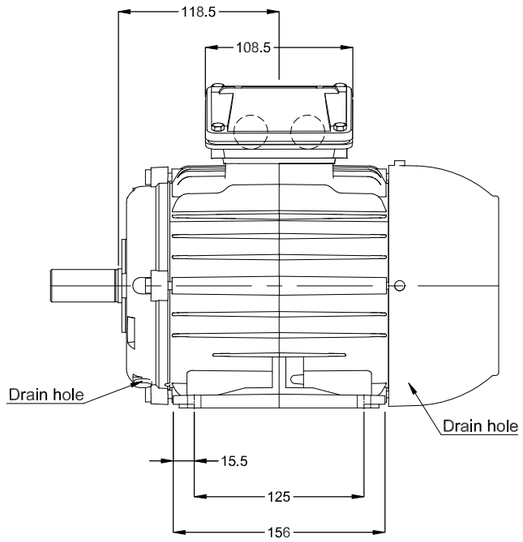

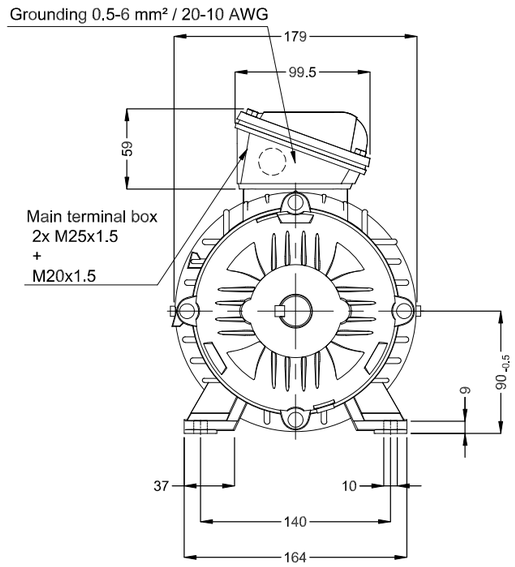

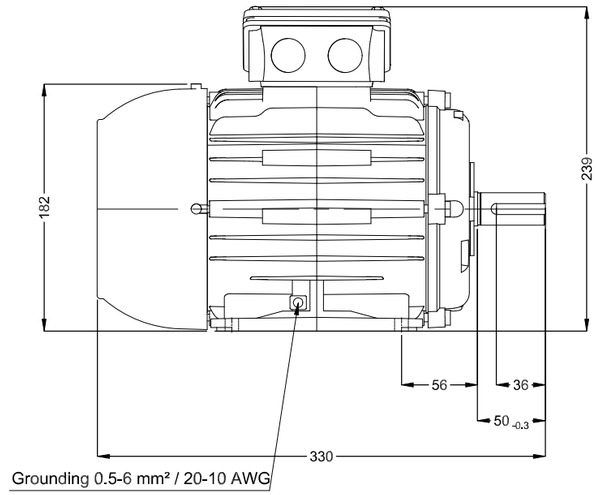

Thermal protection to alarm - thermistors 140°C

Thermal protection to switch off - thermistors 155°C

Color RAL 5009

Painting plan 205P

Mounting B3T

DE Shaft End

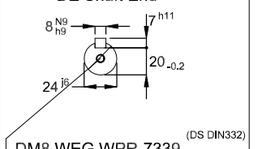

DM8 WEG WPR-7339

2.2 kW 02 Poles 50 Hz

A

ECM	LOC	SUMMARY OF MODIFICATIONS	EXECUTED	CHECKED	RELEASED	DATE	VER
			HYBRISUSER				00

EXECUTED	HYBRISUSER	THREE PH. MOTOR W22Xec IE3	PREVIEW
CHECKED		FRAME 90L IP55 TEFC	WDD 00
RELEASED			
REL. DATE			SHEET /

Dimensions in mm

A3

WEG's property. Forbidden reproduction without previous authorization.