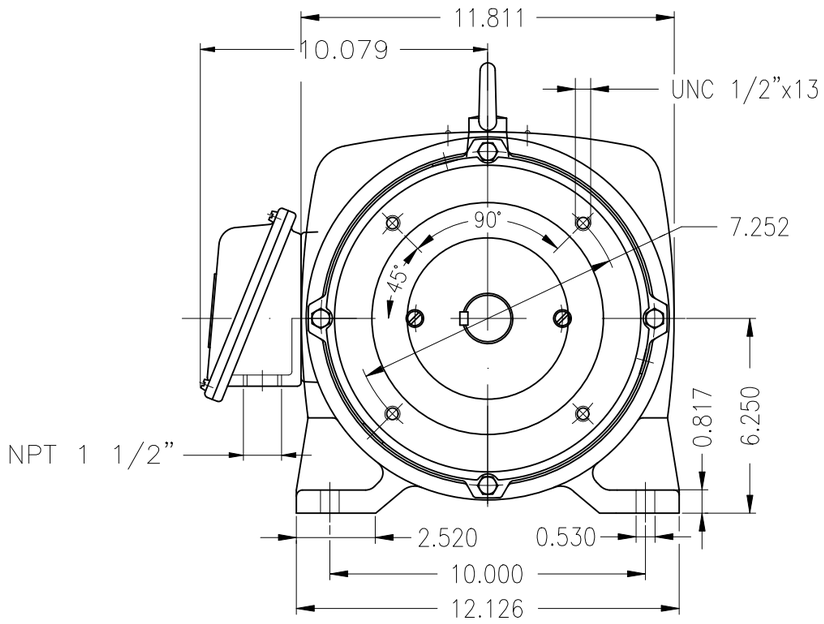

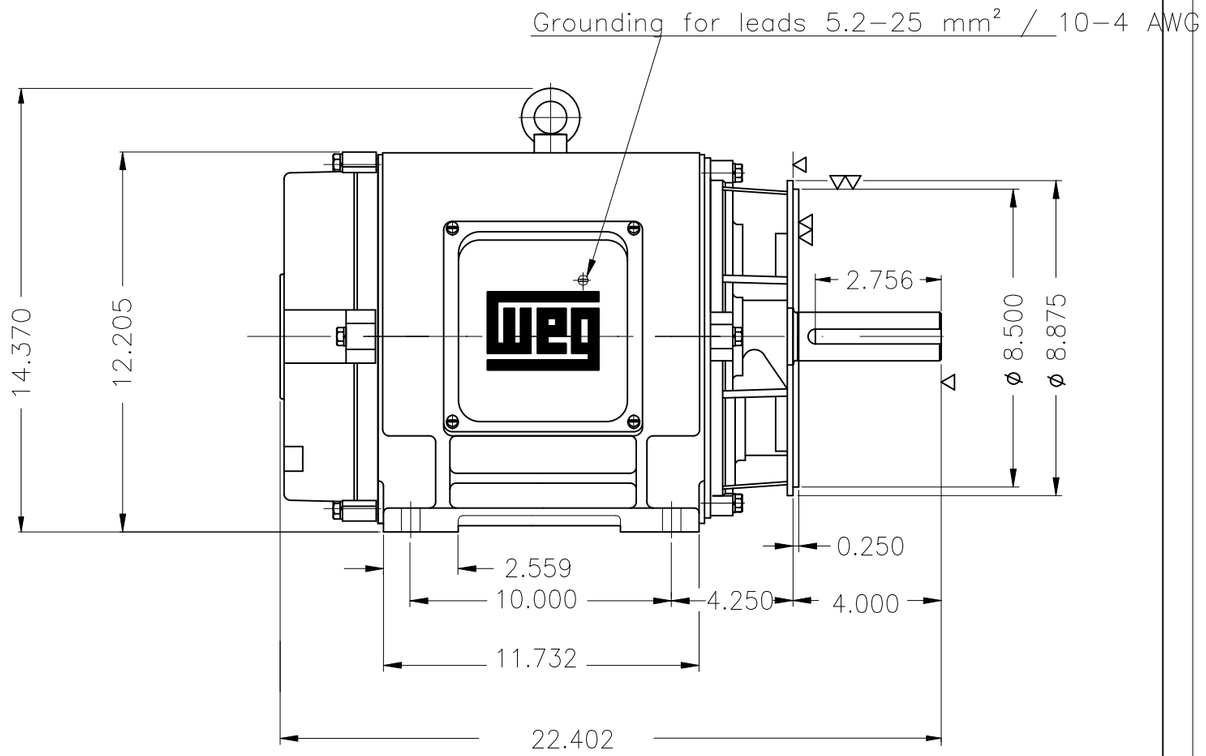

Certification UL/FIRE PUMP
Bearing cap
Color RAL 3002
Painting plan 203A
Mounting B34R(D)

DE Shaft End

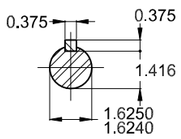

25 HP 02 Poles 60 Hz | A

ECM	LOC	SUMMARY OF MODIFICATIONS	EXECUTED	CHECKED	RELEASED	DATE	VER
			HYBRISUSER				00

EXECUTED	HYBRISUSER
CHECKED	
RELEASED	
REL. DATE	

THREE PH. MOTOR GENERAL HIGH EFF.
FRAME 256TC IP23 ODP

WMO Jaragua do Sul Product Engineering

PREVIEW
WDD 00
SHEET 1 / 1

Dimensions in inches

XME A3

WEG's property. Forbidden reproduction without previous authorization.