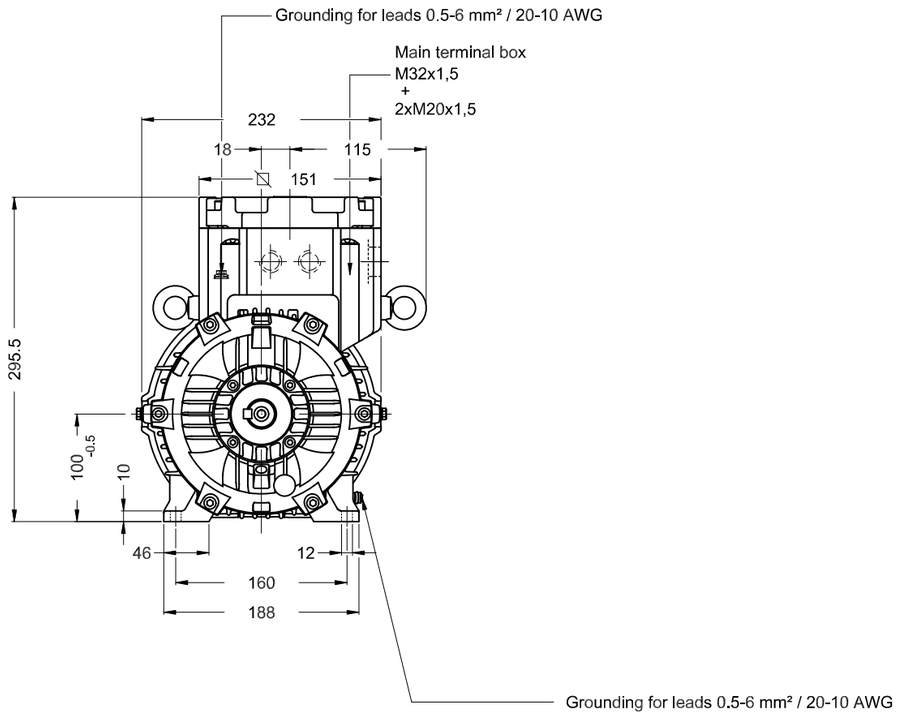

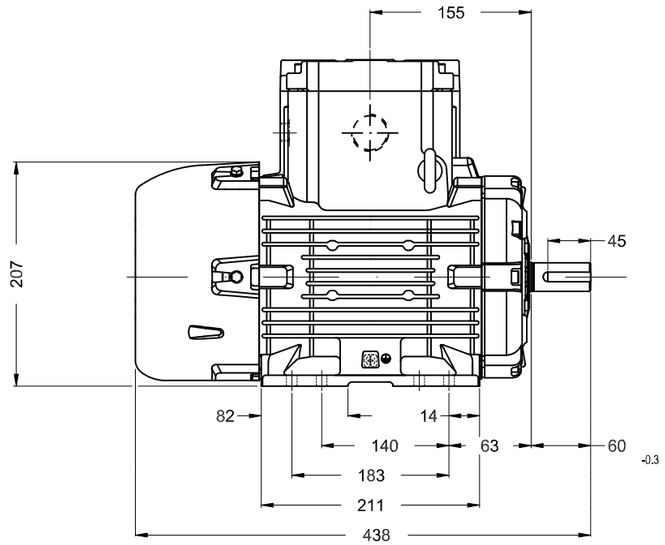

Color RAL 5009

Painting plan 205P

Mounting B3T

DE Shaft End

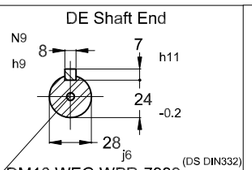

DM10 WEG WPR-7339

3 kW 02 Poles 50 Hz | A

ECM	LOC	SUMMARY OF MODIFICATIONS	EXECUTED	CHECKED	RELEASED	DATE	VER
			HYBRISUSER				00

EXECUTED	HYBRISUSER	THREE PH. MOTOR W22Xdb IE3	PREVIEW
CHECKED		FRAME 100L IP56 TEFC	WDD 00
RELEASED			
REL. DATE		WMO Jaragua do Sul Product Engineering	SHEET 1 / 1

Dimensions in mm

XME A3

WEG's property. Forbidden reproduction without previous authorization.