No reproduction of this drawing is allowed written permission of WEG Motores

EIXO	
PADRÃO	X
OPCIONAL	
ESPECIAL	

Dimensões em mm
Dimensions in mm

CERTIFIED
WEG MOTORES
Certified document.
Not subject to changes.

THIS IS AN UPDATED REVISION, THE PREVIOUS ONE MUST BE DISREGARDED.

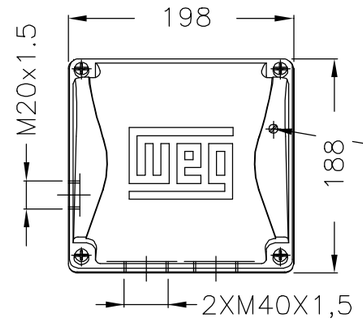

Main terminal box

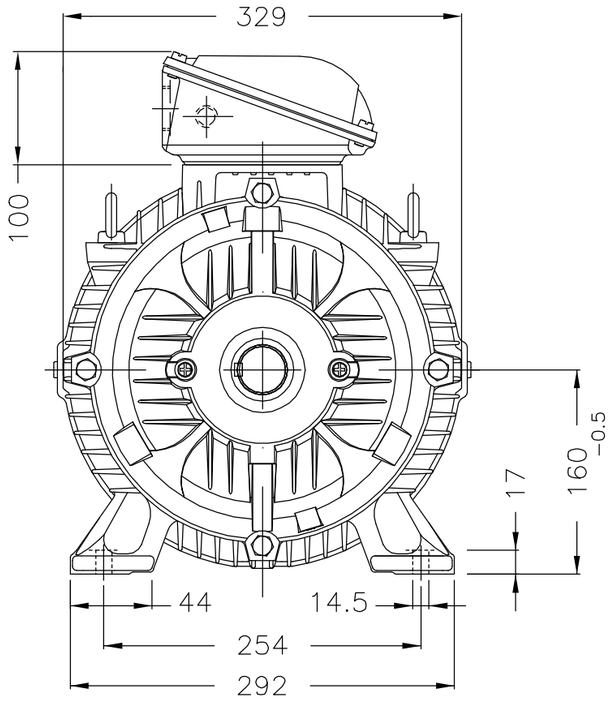

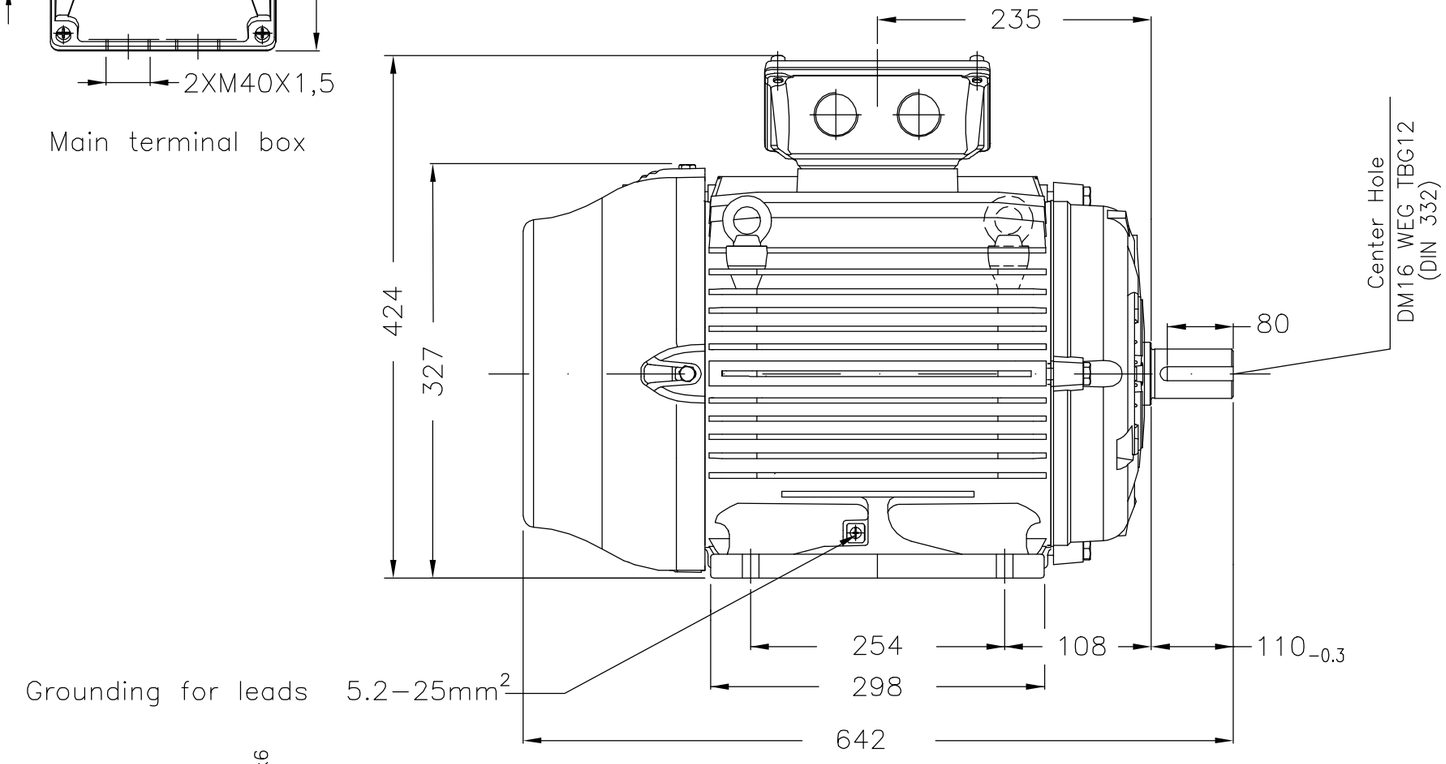

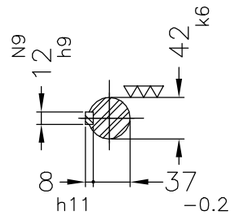

DE Shaft End

Plano de pintura 202P / Painting plan 202P
Placa com certificação especial (Exn) / Nameplate with special certification (Ex-n)
Tampão roscado – M20 (ATEX) / M20 threaded plug (ATEX)
Motor autodeclarado com marcação para gás e pó / Self-certified motor to Zone 2 and 22
Cabo de aterramento dentro da caixa de ligação, interligando os pontos de aterramento da carcaça e da caixa / Equipotential bonding conductor between earthing connection studs located inside the terminal box
Proteção térmica desligamento – Termistor 155°C / Thermistors 155°C To trip
Com graxeira / With grease fitting
Tampão roscado – plástico / Plastic threaded plug
Proteção térmica alarme – Termistor 140°C / Thermistors 140°C – Alarm
Ventilador de plástico condutivo / Conductive plastic fan
Tampão roscado – plástico (ATEX) / Plastic threaded plug (ATEX)
Forma construtiva B3T / Mounting B3T

WEG ELECTRIC CORPORATION – WEC

ECM	LOC	SUMMARY OF MODIFICATIONS	EXECUTED	CHECKED	RELEASED	DATE	VER
500002086099		Tolerância ponta	GILBERTON	DCARDOSO	DCARDOSO	03.03.2022	05
500001282827		ATUALIZADO CFME CLAIM 414182410	PKREYSSIG	ALISSON	ALISSON	08.05.2017	04

EXECUTED	SCARMAGNANI	THREE PHASE W22 MOTOR - HIGH EFF	10001644592
CHECKED	DFRANCISCO	FRAME 160L IP55	000 05
RELEASED	DFRANCISCO		
REL DT	05.03.2012	WMO JARAGUA DO SUL ENGENHARIA DE PRODUTO	SHEET 1 / 1

18.5 kW 02 Poles 50 Hz 412406609/01 ELET/MEC A

UNCONTROLLED COPY

RELEASED

ZME A3

WEG's property. Forbidden reproduction without previous authorization.